MOUNTABLE CONCRETE CURB & GUTTER

MOUNTABLE CURB

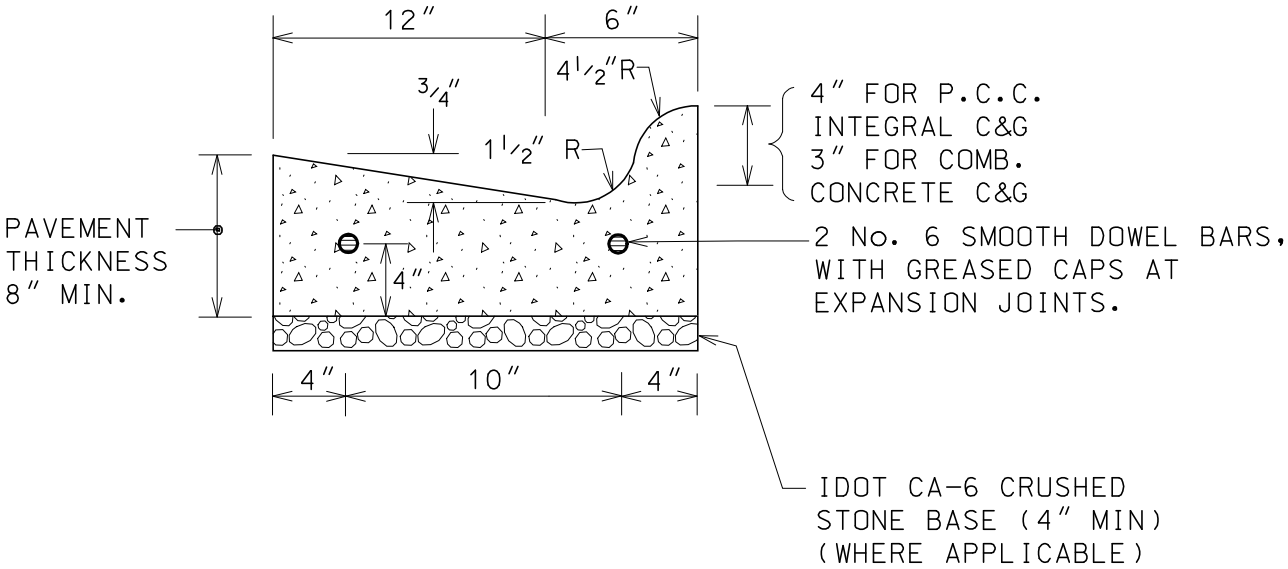

NOTES:

1.) ½" THICK PREFORMED EXPANSION JOINTS SHALL BE INSTALLED AT 50 FOOT INTERVALS. PROVIDE 2-3/4" STEEL DOWEL BARS AT EXPANSION JOINTS.

2.) EXPANSION JOINTS SHALL BE INSTALLED ON EACH SIDE, A DISTANCE OF 2 FEET FROM A STRUCTURE THAT FALLS WITHIN THE CURB AND GUTTER.

3.) CONSTRUCTION JOINTS SHALL BE SAWED TO A MINIMUM DEPTH OF 2 INCHES AND PLACED AT 10 FOOT INTERVALS. SAW CUTS SHALL BE SAWED NO SOONER THAN 6 HOURS AND NO LATER THAN 24 HOURS AFTER PLACEMENT OF CONCRETE.

4.) CURBS SHALL BE CONSTRUCTED IN ACCORDANCE WITH THE "STANDARD SPECIFICATIONS FOR ROAD AND BRIDGE CONSTRUCTION" (IDOT). MOST RECENT EDITION UNLESS NOTED OR DEPICTED HEREIN.

5.) A PROTECTIVE COAT SHALL BE APPLIED IN ACCORDANCE WITH THE STANDARD SPECIFICATIONS.

DATE: 9-30-10

MOUNTABLE CURB & GUTTER