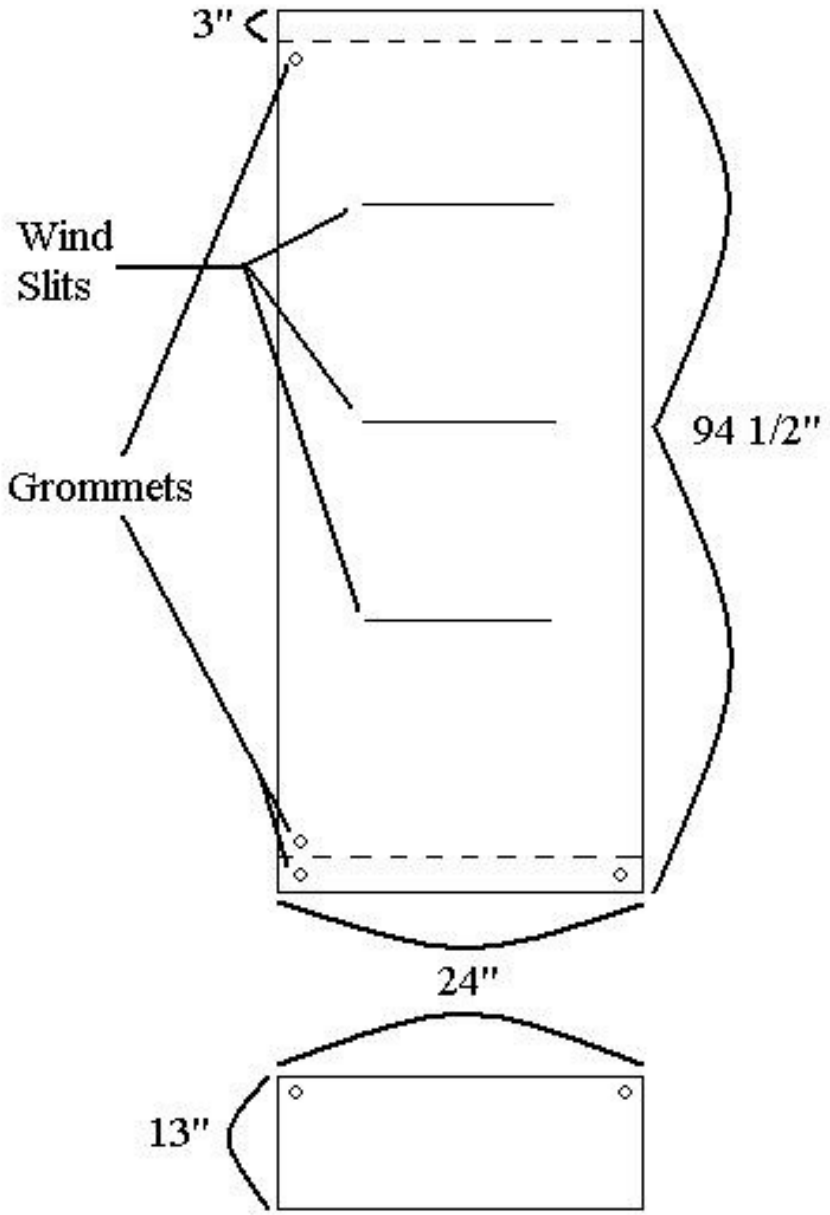
3"
Wind
Slits
Grommets
94 1/2"
24"
13"