Chapter 15.04

BUILDING CODE[1]

Sections:

15.04.010	International Building Code 2009 – Regulations adopted and modified.
15.04.015	Amendments to the 2009 International Building Code.
15.04.020	2009 International Residential Code – One family and two family residences – Regulations adopted and modified.
15.04.030	International Mechanical Code 2009 – Regulations adopted and modified.
15.04.035	International Fuel Gas Code 2009 – Regulations adopted and modified.
15.04.040	National Electrical Code 2008 – Regulations adopted and modified.
15.04.045	Amendments to the 2008 National Electric Code NFPA 70
15.04.050	Plumbing code – adopted – modifications.
15.04.055	International Energy Conservation Code 2012 – Regulations Adopted and Modified.
15.04.060	Building permit – Required.
15.04.090	Architectural committee – Created – Composition – Duty.
15.04.105	Flood damage prevention.
15.04.120	Time limit.

15.04.010 International Building Code 2009 – Regulations Adopted and Modified.

The provisions of Chapters 2 through 35, inclusive, of the 2009 International Building Code issued by the International Code Council, Inc., 4051 West Flossmoor Road, Country Club Hills, IL, 60478, not less than three (3) copies of which have been and are on file in the Office of the Clerk of the City of St. Charles, Illinois, for more than thirty (30) days, together with the amendments listed in Section 15.04.015 hereof, are hereby adopted as the regulations governing the construction of buildings and structures within the City of St. Charles, except for one- and two-family dwellings and townhouses not more than three stories in height, which are covered by Section 15.04.020. (For adoption of administrative provisions in Chapter 1 of the International Building Code, see Chapter 15.101).
(Ord. 2010-M-42 § 1; Ord. 2004-M-62 § 1.)

15.04.015 Amendments to the 2009 International Building Code.

1. Amend Section 202 "Definitions" (pg. 11) by adding the following:
   Townhouse: A single family dwelling unit constructed in a group of 3, 4, 5, or 6 attached units in which each unit extends from foundation to roof and with open space on at least two (2) sides. Dwelling units where more than six (6) units are attached shall be governed by code provisions applicable to multiple family dwellings, rather than the provisions of this one (1) and two (2) family dwelling code.
2. Amend Section 402.13 "Security Grills and Doors" (pg. 40) by adding Note #5 as follows:
   5. A security grill may not serve as the sole exit.

3. Delete the provisions of Section 402.10 "Smoke Control" (pg. 39) and substitute the following therefore:
   402.10 Smoke Control: A ventilation system shall be provided that is capable of not less than six (6) air changes per hour for the volume of the tenant spaces and the hall. The ventilation system shall exhaust smoke from the point of development. Design shall be in accordance with Section 909.
4. Amend Section 403.3 "Automatic Sprinkler Systems" by deleting exceptions #1 & #2.
5. Amend Section 404.3 "Automatic Sprinkler Protection" (pg. 43) by deleting exceptions #1 & #2.
6. Amend Section 410.6 "Automatic Sprinkler System" by deleting exceptions #1, #2, & #3.
7. Amend the provisions of Section 506 by adding Section 506.6, as follows:
   506.6 Special Restrictions for Type V Construction: Notwithstanding any provisions of this code to the contrary, there shall be no increase of the allowable areas specified in Table 503 for any building of Type V-A or Type V-B Construction. Floor areas greater than those specified in Table 503 are only permitted for Type V construction when a four hour firewall is provided between sections of the building, and each section is within the limitations of Table 503. A minimum separation of 30 feet shall be provided between exterior walls of type V construction.
8. Delete the provision in section 706.3 "Materials" (pg. 90) in its entirety and substitute the following therefore:
   706.3 Materials: Firewalls shall be constructed of approved masonry materials or other similar approved product or assembly.
9. Delete the provisions in Section 903.2 "Automatic Sprinkler Systems – Where Required," inclusive of subsections 903.2.1 through 903.2.12 and Table 903.2.11.6 and substitute the following therefore:
   903.2 Where required. An approved automatic sprinkler system installed in accordance with the provisions of all applicable codes and standards shall be provided and maintained in full operating condition throughout every story and basement of all buildings subject to this code.

Exceptions:

1) Unoccupied structures of less than 400 square feet, considered low hazard and located not less than 100 feet from another structure. The requirements shall be subject to modifications by the authority having jurisdiction to compensate for particular building conditions to meet the intention of the code.
2) Salt Dome Structures, provided:
   a. The structure is constructed with approved noncombustible material.
   b. The structure is continually monitored by an approved automatic fire alarm system.
   c. The structure is located a minimum distance of one-hundred (100) feet from any principle building, fueling facilities, and other high hazard occupancies or materials as defined in the adopted Building Code.
3) Unenclosed Roof Structures:
   a. The structure is constructed with approved noncombustible material.
   b. The structure is located a minimum distance over one hundred (100) feet from any principle building.

10. Amend Sections 903.6 by adding 903.6.3 as follows:
    903.6.3 Change of use classification: An automatic sprinkler system shall be provided throughout a building, when the use classification of the building or a space within the building changes. This requirement shall be subject to modifications by the authority having jurisdiction to compensate for particular building conditions.

11. Delete the provisions of Section 907.2 "Where required" and substitute the following therefore:
    907.2 Where Required: An approved fire alarm system installed in accordance with the provisions of this code and NFPA 72 shall be provided in new buildings and structures in accordance with Sections 907.2.1 through 907.2.23 and provide occupant notification in accordance with 907.6, unless other requirements are provided by another section of this code. Notwithstanding any provision of Section 907 and its subsections to the contrary, an approved manual fire alarm signaling system shall be installed and maintained in all buildings over one (1) story in height or over 1,000 square feet.
    Delete all of the exceptions to 907.2.3 "Group E," in their entirety.
12. Delete the provisions of Section 907.6.5 "Monitoring" and its exceptions and substitute the following therefore:
    907.6.5 Supervisory service: Where required by this chapter or the International Fire Code, an approved supervising station in accordance with NFPA 72 shall monitor fire alarm systems. All required fire protective signaling systems shall transmit alarm and trouble signs to an approved central station, proprietary system, or remote-station system, and shall be approved by the Fire Department.
    The following methods are approved:
    1) Direct connect
    2) AES Radio or other approved 2-way radio frequency systems
    3) Or other methods approved by the Fire Official
    Exception: Supervisory service is not required for:
    1) Single- and multiple-station smoke alarms required by Section 907.2.10
    2) Smoke detectors in Group I-3 Occupancies
    3) Automatic sprinkler systems in 1 and 2 family dwellings
13. Delete the provisions of Section 907.6.5.1 "Automatic Telephone-Dialing Devices."
14. Amend the provisions of Section 912.1 "Installation" and substitute the following therefore:
    912.1 Installation. The type (Siamese, Storz) and size of the fire department connection shall be in accordance with the NFPA standard applicable to the system design and shall be subject to approval of the Fire Department, based upon an analysis of the building's size and use group. Generally, a 5-inch size, Storz type connection is required.
15. Add subparagraph 6 to Section 1006.3 "Illumination emergency power" as follows:
    6. In all rooms and spaces over 2,000 square feet in area with an occupancy load of 20 or more.
16. Amend the provisions of Section 1008.1.9.3 "Locks and Latches" by deleting Conditions No. 2, 2.1, 2.2, and 2.3.
17. Amend Table 1018.1 to read as follows:

Table 1018.1
Corridor Fire Resistance Rating

Occupancy	Occupant Load Served by Corridor	Required Fire-Resistance Rating (hours)	
		Without Sprinkler System	With Sprinkler System (c)
H-1, H-2, H-3	All	Not Permitted	1
H-4, H-5	Greater than 30	Not Permitted	1
A, B, E, F, M, S, U	Greater than 30	Not Permitted	1
R	Greater than 10	Not Permitted	1
I-2 (a), I-4	All	Not Permitted	1
I-1, I-3	All	Not Permitted	1 (b)

(a) For requirements for occupancies in Group I-2, see Section 407.3. (b) For a reduction in the fire-resistance rating of occupancies in Group I-3, see Section 408.7. (c) Buildings equipped throughout with an automatic sprinkler system in accordance with Section 903.3.1.1 or 903.3.1.2 where allowed.

18. Delete the provisions of Sections 1805.4.5 "Timber Footings" (pg. 366) and Section 1805.4.6 "Wood Foundations" (pg. 366) in their entirety.
19. Amend the provisions of Section 2308.8.2.1 "Engineered Wood Products" (pg. 473) by adding paragraph Section 2803.8.2.2 "I-Joist Frame" as follows:
    2308.8.2.1 I-Joist Frame: Floor and/or ceiling framing consisting of Engineered I-Joist shall have 5/8 Type X drywall placed at the underside of the joist with paper-tape embedded in compound over joints and covered in additional compound to provide protection of concealed space in accordance with NFPA 13.
20. Delete the provisions of Section 3411 "Accessibility for Existing Building" in its entirety. The design for accessibility shall comply with applicable provisions of the most current addition of the Illinois Accessibility Code and the Fair Housing Act.
21. Insert the date of August 1, 2004 in Section 3410.2 "Applicability."
22. Amend the provisions of Section 3412.2.3 "Additions" (pg.578) by adding paragraph Section 3412.2.3.1 "Fire Alarm Systems – Extension Installation" as follows:
    3412.2.3.1 Fire Alarm Systems – Extension Installation: An existing fire alarm system shall be extended to provide protection to any additions to the building. If no fire alarm system presently exists, and the addition or additions individually or in aggregate exceed 200 square feet, an approved fire alarm system shall be installed throughout the entire existing building and addition(s) thereto.
23. Add Exhibit A:

Exhibit A

Performance Guidelines for High Hazard Uses in the City of St. Charles

1. Specific location: The geographic location and distances to other structures, rivers, streams, and other use groups.
2. Zoning: The proximate distances to Assembly, Educational, Institutional, and Residential uses and vacant land zoned for these uses.
3. Types of hazardous materials which are not allowed: Materials listed in Section 307.3 High Hazard Group H-1 that present a detonation hazard shall not be permitted under any circumstances.
4. Allowable construction types: Type I and II only.
5. Required fire protection for High Hazard materials:
    a. Provide extra hazard Group II fire sprinkler system
    b. Provide a fixed foam fire protection system
6. Required water supply system: 3,000 to 6,000 gallons per minute from a reliable source.

(Ord. 2010-M-42 § 2; Ord. 2006-M-63 § 1; Ord. 2004-M-62 § 1.)

15.04.020 One family and two family residences-Regulations adopted and modified.

The provisions of the 2009 International Residential Code for One and Two Family Dwellings, published February 2009 by the International Code Council, Inc., 5203 Leesburg Pike, Suite 708, Falls Church, Virginia 22041-3401 (hereinafter sometimes referred to as "the IRC"), not less than three (3) copies of which have been and are on file in the Office of the Clerk of the City of St. Charles, Illinois, for more than thirty (30) days, together with the amendments listed herein, are hereby adopted as the

regulations governing the construction of one and two family dwellings and townhouses not more than three stories in height.

Amendments to the 2009 International Residential Code for One and Two Family Dwellings:

Chapter 1 – Administration:

A. **Section R101.2 Scope:** Revise to read as follows:
R101.2 Scope. The provisions of the International Residential Code for One and Two Family Dwellings shall apply to the construction, alteration, movement, enlargement, replacement, repair, equipment, use and occupancy, location, removal, and demolition of detached one and two family dwellings not more than three stories in height with a separate means of egress and their accessory structures.

B. **Section R105.2 Work exempt from permit:** Delete this section.

C. **Section R105.2.3 Public service agencies:** Delete this section.

D. **Section R015.5 Expiration:** Revise to read as follows:
R105.5 Expiration. Every permit, except demolition permits, shall become invalid or void unless the work authorized by such permit is commenced within 180 days after its issuance, or if the work authorized by such permit is suspended or abandoned for a period of 180 days after the time the work is commenced. Demolition must commence within ten (10) days and completed within thirty (30) days of issuance, otherwise the permit becomes invalid. The Building Official is authorized to grant, in writing, one or more extensions of time, for any permits, for a period not more than 180 days each. The extension shall be requested in writing and justifiable cause demonstrated.

E. **Section R105.7 Placement of permit:** Revise to read as follows:
R105.7 Placement of permit. The building permit card shall be kept on the site of the work and be visible from the street until such time as a certificate of occupancy permit has been issued, or a final inspection has been performed.

F. **Section R106.1.3 Information for construction in flood hazardous areas:** Revise to read as follows:
R106.1.3 Information for construction in flood hazardous areas. For buildings and structures in flood hazard areas, as established on local floodway rate maps, locally adopted flood plain ordinances shall apply.

G. **Section R106.3.1 Approval of construction documents:** Revise to read as follows:
R106.3.1 Approval of construction documents. When the Building Official issues a permit, the construction documents shall be approved in writing or by stamp. One set of the approved construction documents as reviewed shall be retained by the Building Official. The other set shall be returned to the applicant and shall be kept on the site of the project and shall be open to inspection by the Building Official or his or her authorized agent/representative.

H. **Section R106.3.4 Pre-Application conference:** Add a new section to read as follows:
R106.3.4 Pre-Application conference. All applicants and owners seeking demolition permits for principal buildings on a lot or site shall first be required to attend a pre-application conference with the Building Official and other City staff as directed, for the purpose of discussing the City of St. Charles requirements for demolition and reconstruction.

I. **Section R109.1.3 Flood plain inspection:** Delete this section.

J. **Section R110.1 Use and occupancy:** Delete the exceptions.

K. **Section R110.3 Certificate issued:** Delete lines 3, 5, 7, 8, and 9.

Chapter 2 – Definitions:

A. **Change the stated term MANUFACTURED HOME to MANUFACTURED/MOBILE HOME.**

B. **Delete the stated definition of TOWNHOUSE and substitute therefore:**
TOWNHOUSE. A single family dwelling unit constructed in a group of 3, 4, 5 or 6 attached units in which each unit extends from foundation to roof and with open space on at least two sides. Dwelling units where more than six units are attached shall be governed by code provisions applicable to multiple family dwellings, rather than the provisions of this one and two family dwelling code.

Chapter 3 – Building Planning:

A. **Table R301.2 (1) Climatic and Geographic Design Criteria:** Revise to read as follows:

Ground Snow Load #per Square Foot	Wind Speed in MPH	Seismic Design Category f,g	Subject to Damage From				Winter Design Temps f	Flood Hazard h
			Weathering a	Frost Line Depth b	Termite c	Decay d		
30	**90**	**B**	**SEVERE**	**42”**	**M-H**	**S-M**	**-5f**	**Refer to Title 18, St. Charles Municipal Code**

See captions under Table R301.2 (1) in the book for exceptions and conditions of approvals.

B. **Section R301.2.4 Floodplain construction.** Delete this section.

C. **Section R302.1 Exterior walls:** Delete exceptions 1 & 2.

D. **Section R302.2 Townhouses:** Revise to read as follows:
R302.2 Townhouses. Each townhouse, as defined in this code, shall be constructed as a separate single-family dwelling unit and shall be separated by a minimum of an approved 2-hour rated masonry wall, which shall extend vertically from the foundation to the underside of the roof sheathing and horizontally the full length of the common wall. The number of single family dwelling units attached in this manner shall not exceed six (6).
Exception: When the complete building is provided with an approved residential fire sprinkler system, an approved 2-hour rated UL listed assembly can substitute for the 2-hour rated masonry wall.
(Ord. 2012-M-10 § 1.)

E. **Section R302.3 Two family dwellings:** Revise to read as follows:

R302.3 Two family dwellings. Dwelling units in two family dwellings shall be constructed as a separate single-family dwelling unit and shall be separated by a minimum of an approved 2-hour rated masonry wall, which shall extend vertically from the foundation to the underside of the roof sheathing and horizontally the full length of the common wall. Floor/ceiling assemblies shall extend to and be tight against the exterior wall, and wall assemblies shall extend from the foundation to the underside of the roof sheathing and shall extend from the foundation to the underside of the roof sheathing and shall extend the full length of the common wall.
Exception: When the complete building is provided with an approved residential fire sprinkler system, an approved 2-hour rated UL listed assembly can substitute for the 2-hour rated masonry wall
(Ord. 2012-M-10 § 1.)

F. **Section R302.6 Dwelling/garage fire separation:** Revise to read as follows:
R302.6 Dwelling/garage fire separation. The garage shall be separated from the residence and any attic area by not less than 5/8-inch type X gypsum board applied to the garage side and taped with a minimum one coat of approved joint tape and compound. Where the separation is a floor-ceiling assembly, the structure supporting the separation shall be protected by not less than 5/8-inch type X gypsum board with one coat of approved joint tape and compound or equivalent. The garage floor shall be poured a minimum of 4-inches below the top of the foundation to form a gas curb on any wall of the garage abutting the house.
Delete Table R302.6.
(Ord. 2012-M-10 § 1.)

G. **Section R302.7 Under stair protection:** Revise to read as follows:
R302.7 Under stair protection. Enclosed accessible space under stairs shall have walls, under stair surfaces, and any soffits, protected on the enclosed side with 5/8-inch type X gypsum board.
(Ord. 2012-M-10 § 1.)

H. **Section R303.3 Bathrooms, Exception:** Revise to read as follows:
Exception: The glazed area shall not be required where artificial light and mechanical ventilation systems are provided. The minimum ventilation rates shall be 50 cfm for intermittent ventilation or 20 cfm for continuous ventilation. Ventilation air from the space shall be exhausted directly to the exterior of the structure by means of either the soffit area with an approved connection to the soffit or through the roof with an insulated (R-3) duct and approved roof fitting.
(Ord. 2012-M-10 § 1.)

I. **Section R309.1.2. Opening protection:** Add a new section to read as follows:
R309.1.2 Opening Protection. Openings from a private garage directly into a room used for sleeping purposes shall not be permitted. Other openings between the garage and residence shall be equipped with solid wood doors not less than 1 3/8-inches in thickness, solid or honeycomb core steel doors not less than 1 3/8-inches thick. All such doors shall be equipped with self-closing hinges.
(Ord. 2012-M-10 § 1.)

J. **Section R309.2.1 Separation required:** Add a new section to read as follows:
R309.2.1 Separation required. The garage shall be separated from the residence and any attic area by not less than 5/8-inch type X gypsum board applied to the garage side and taped with a minimum one coat of approved joint tape and compound. Where the separation is a floor-ceiling assembly, the structure supporting the separation shall be protected by not less than 5/8-inch type X gypsum board with one coat of approved joint tape and compound or equivalent. The garage floor

shall be poured a minimum of 4-inches below the top of the foundation to form a gas curb on any wall of the garage abutting the house.
(Ord. 2012-M-10 § 1.)

K. **Section 310.1 Emergency escape and rescue required:** Revise to read as follows:
R310.1 Emergency escape and rescue required. All basements and sleeping rooms shall have at least one openable emergency escape and/or rescue window or exterior door opening for emergency escape and/or rescue. Where windows are provided as a means of escape and/or rescue, they shall have a sill height of not more than 44-inches above the finished floor. Where a window(s) is provided as a means of egress and/or rescue from a basement or basement bedroom, they shall have a sill height not more than 36-inches above the finished floor. Where a door opening having a threshold below the adjacent ground elevation serves as an emergency escape and rescue opening and is provided with a bulkhead enclosure, the bulkhead enclosure shall comply with Section 310.3. The net clear opening dimension required by this section shall be obtained by the normal operation of the window or door opening from the inside. Escape and rescue window openings with a finish sill height below the adjacent ground elevation shall be provided with a window well in accordance with Section R310.2 of this Code.
(Ord. 2012-M-10 § 1.)

L. **Section R310.2.1 Ladder and steps:** Revise to read as follows:
R310.2.1 Ladder and steps. Window wells with a vertical depth greater than 36-inches below the adjacent ground level shall be equipped with a permanently affixed ladder or steps usable with the window in the full open position. Ladders and steps required by this section shall not be required with Section R314 and R315. Ladders or rungs shall have an inside width of at least 12-inches, shall project at least 3-inches from the wall, and shall be spaced not more than 18-inches on center vertically for the full height of the window well.
(Ord. 2012-M-10 § 1.)

M. **Section R311.2 Egress Door:** Revise to read as follows:
R311.2 Egress Door. Not less than two (2) exits with a minimum of one (1) exit conforming to this chapter shall be required from each dwelling unit. All such exits shall discharge at grade. The required exit doors shall not pass through a garage.
(Ord. 2012-M-10 § 1.)

N. **Section R311.7.5 Landings for stairways:** Revise to read as follows:
R311.7.5 Landings for stairways. A minimum of 3-foot by 3-foot landing shall be required on each side of an egress door. The floor or landing shall not be more than 1 1/2-inches lower than the top of the threshold.
Exception:
1. At the top of a flight of all stairs, provided the door does not swing over the stairs.
(Ord. 2012-M-10 § 1.)

O. **Section R313.1 Townhouse automatic fire sprinkler systems:** Revise to read as follows:
R313.1 Townhouse automatic fire sprinkler systems. An automatic residential fire sprinkler system shall be installed in townhouses.
Exception No. 1: An automatic residential fire sprinkler system shall not be required when additions or alterations are made to existing townhouses that do not have an automatic residential fire sprinkler system installed.
Exception No. 2: The requirement for the installation of automatic fire sprinkler systems in townhouses is deferred until January 1, 2014.

Exception No. 3: An automatic residential fire sprinkler system shall not be required where, as determined and certified by an approved fire protection engineer, the existing domestic water service system cannot meet the standards set forth for the installation of such system. The applicant shall reimburse the City for the actual cost of service invoiced to the City by the fire protection engineer.

R313.1.1 Design and installation. Automatic residential fire sprinkler systems for townhouses shall be designed and installed in accordance with Section P2904.

(Ord. 2012-M-64; Ord. 2012-M-10 § 1.)

P. **Section R313.2 One- and two-family dwellings automatic fire sprinkler systems:** Revise to read as follows:

R313.2 One- and two-family dwellings automatic fire systems. An automatic residential fire sprinkler system shall be installed in one-and two-family dwellings.

Exception No. 1: An automatic residential fire sprinkler system shall not be required for additions or alterations to existing buildings that are not already provided with an automatic residential sprinkler system.

Exception No. 2: The requirement for the installation of automatic fire sprinkler systems in one- and two-family dwellings is deferred until January 1, 2014.

(Ord. 2012-M-64)

Exception No. 3: An automatic residential fire sprinkler system shall not be required where, as determined and certified by an approved fire protection engineer, the existing domestic water service system cannot meet the standards set forth for the installation of such system. The applicant shall reimburse the City the actual cost of service invoiced to the City by the fire protection engineer.

R313.2.1 Design and installation. Automatic residential fire sprinkler systems shall be designed and installed in accordance with Section P2904 or NFPA 13D.

(Ord. 2012-M-10 § 1.)

Q. **Section R311.7.7 Handrails:** Revise to read as follows:

R311.7.7 Handrails. Handrails shall be provided on at least one side of each continuous run of treads or flight with more than three (3) or more risers.

(Ord. 2012-M-10 § 1.)

R. **Section R314.3 Locations:** Revise to read as follows:

R314.3 Locations. Single and multiple-station smoke alarms shall be installed in the following locations:

a. In each sleeping room.
b. Outside of each separate sleeping room or area, within 15 feet of all bedrooms.
c. On each additional story of the dwelling, including basements and cellars, but not including crawl spaces and uninhabitable attics.
d. In dwellings or dwelling units with split-levels. For the purpose of this section each split-level shall be considered a story.

When more than one (1) smoke alarm is required to be installed within an individual dwelling unit, the alarm devices shall be interconnected in such a manner that the actuation of one (1) alarm will activate all of the alarms in the dwelling unit. The alarm shall be clearly audible in all bedrooms over background noise levels, with all intervening doors closed.

All smoke alarms shall be listed and installed in accordance with the provisions of this code and the household fire warning provisions of NFPA 72.

(Ord. 2012-M-10 § 1.)

S. **Section R317.1.2 Ground contact:** Revise to read as follows:

R317.1.2 Ground contact. Supports for permanent structures intended for human occupancy and which come in contact with the ground shall not be constructed of wood.
(Ord. 2012-M-10 § 1.)

T. **Section R317.1.4 Wood columns:** Revise to read as follows:
R317.1.4 Wood columns. Posts, poles, and columns supporting structures that are embedded in concrete, in direct contact with the earth or are embedded in concrete exposed to the weather are prohibited.
(Ord. 2012-M-10 § 1.)

U. **Section R322 Flood resistant construction:** Delete this section.
(Ord. 2012-M-10 § 1.)

Chapter 4 – Foundations:

A. **Section R401.1 Application:** Amend to read as follows:
R401.1 Application. The provisions of this Chapter shall control the design and construction of the foundation and foundation spaces of all buildings and structures.

B. **Section R402.1, 402.1.1, 402.1.2:** Delete these sections.

C. **Section R403.1 General:** Delete the words "wood foundation" within the first sentence.

D. **Section R403.1.1 Minimum size:** Amend to read as follows:
R403.1.1 Minimum size. Minimum sizes for concrete and masonry footings shall be as follows. Footing width shall be a minimum of twice and width of the wall it is supporting, or a minimum of 18-inches, whichever is greater. Unless soil conditions warrant a greater width, or so designed and certified by a license design professional, footing projections shall be equal to 1/4 the width of the footing and the wall must fit center on the footing. Single story structures may be placed on 10-inch wide by 42-inch deep trench footing. Footing thickness shall be a minimum of 8 inches or the same depth as the wall thickness, whichever is greater, or as designed by a licensed design professional. See Figure R403.1 (1) for an illustration.

E. **Table R403.1 Minimum width of concrete or masonry footings (inches):** Delete this table.

F. **Figure R403.1 (1) Concrete and masonry foundation details:** Delete this figure and substitute the following therefore:

Figure R403.1 (1)
Concrete and Masonry Foundation Details

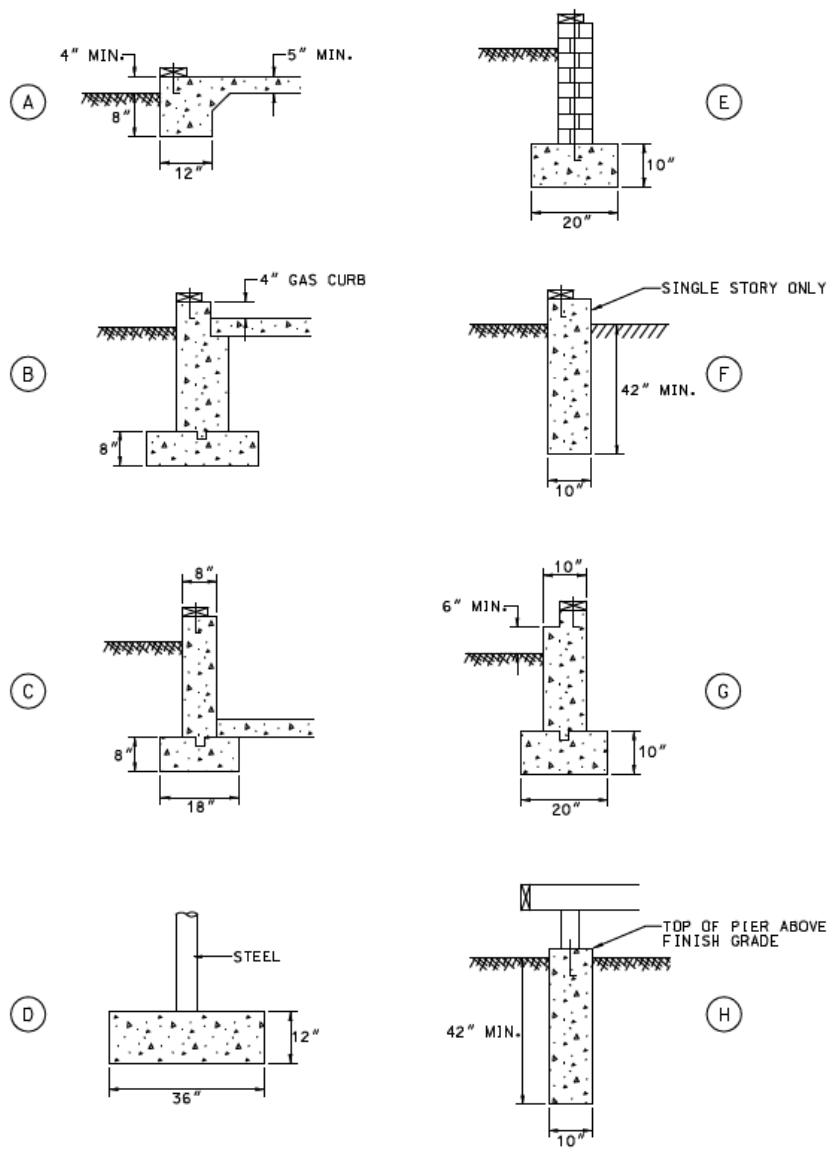

A= Typical turned down garage slab.
B= Typical foundation detail for attached garage with gas curb.
C= Typical footing and wall detail.
D= Typical pier pad for lolly column in basement.
E= Typical footing and wall detail for masonry block wall.
F= Typical trench foundation.
G= Typical wall and footing for brick veneer home.
H= Typical posthole detail for deck.

G. **Figure R403.1 (2) Permanent Wood Foundation Basement Wall section:** Delete this figure.

H. **Figure R403.1 (3) Permanent Wood Foundation Crawl Space section:** Delete this figure.

I. **Section R403.2 Footings for Wood Foundations:** Delete this figure.

J. **Section R404.1.5.3 Pier and Curtain Wall Foundations:** Delete this section.

K. **Section R404.2 Wood Foundation Walls:** Delete this section.

L. **Sections R404.2.2 Stud Size and R404.2.3 Height of Backfill:** Delete these sections.

M. **Table R404.2.3 Plywood Grade and Thickness for Wood Foundation Construction:** Delete this table.

N. **Sections R404.2.4 Backfilling; R404.2.5 Drainage and Damp Proofing; and R404.2.6 Fastening:** Delete these sections

O. **Sections R405.2 and R405.2.1 through R405.2.3 Wood Foundations:** Delete these sections.

P. **Sections R406.3 Damp Proofing of Wood Foundations: R406.3.1, R406.3.2, R406.3.3, and R406.3.4:** Delete these sections.

Q. **Section R407.1 Wood Column Protection:** Delete this section.

R. **Section R408.4.1 Crawl Space Floor:** Add a new section to read as follows:
R408.4.1 Crawl Space Floor. A minimum of a 2-inch thick slush coat of poured concrete shall be installed over a minimum of 4-inch thick stone in the crawl space, with a minimum of a six (6) mil thick polyethylene film moisture barrier with all joints lapped a minimum of 6 inches.

Chapter 5 – Floors:

A. **Section R502.1.4.1 Fire Protection. Prefabricated Wood I-Joists:** Add a new section to read as follows:
R502.1.4.1 Fire Protection. Prefabricated Wood I-Joists. When prefabricated wood I-Joists are used and there is usable space above and below a floor/ceiling assembly, the assembly shall be protected from fire impingement by one of the following:
1. The minimum application of one layer of 5/8-inch drywall and draft stopped per Section 502.12 of the 2009 International Residential Code.
2. The installation of an approved sprinkler system.

A1. **Section R502.1.4.2 Fire Protection. Engineered wood joists or open web floor trusses:** Add a new section to read as follows:
R502.1.4.2 Fire Protection. Engineered wood joists or open web floor trusses. When engineered wood joists or open web floor trusses are used and there is usable space above and below a floor/ceiling assembly, the assembly shall be protected from fire impingement by one of the following:
1. The minimum application of one layer of 5/8-inch type X drywall and draft stopped per a Section 502.12 of the 2009 International Residential Code.
2. The installation of an approved automatic residential fire sprinkler system.

(Ord. 2012-M-10 § 2.)

B. **<u>Section R502.7.1 Bridging</u>:** Amend to read as follows:
R502.7.1 Bridging. Joists shall be supported laterally by solid blocking, or diagonal bridging (wood or metal) at intervals not exceeding 8 feet.

C. **<u>Section R502.11.4 Truss Design Drawings</u>:** Amend to read as follows:
R502.11.4 Truss Design Drawings. Truss design drawings shall be submitted to and approved by the Building Official prior to a permit being issued for the structure. Truss design drawings shall be provided with the shipment of trusses to the job site. These truss design drawings shall include, at a minimum, the information specified below:

1. Slope or depth, span, and spacing;
2. Location of all joints;
3. Required bearing widths;
4. Design loads as applicable;
   - 4.1 Top cord live load (including snow load)
   - 4.2 Top cord dead load
   - 4.3 Bottom cord live load
   - 4.4 Bottom cord dead load
   - 4.5 Concentrated loads and their points of application
   - 4.6 Controlling wind and earthquake loads
5. Adjustments to lumber and joint connector design values for conditions of use;
6. Each reaction force and direction;
   Joint connector type and description (e.g. size, thickness, or gauge) and the dimensioned location of each joint connector except where symmetrically located relative to the joint interface;
7. Lumber size, species and grade for each member;
8. Connection requirements for:
   - 9.1 Truss-to-truss girder
   - 9.2 Truss ply-to-ply
   - 9.3 Field splices
9. Calculated deflection ratio and/or maximum description for live and total load;
10. Maximum axial compression forces in the truss members or enable the building designer to design the size, connections, and anchorage of the permanent, continuous lateral bracing. Forces shall be shown on the truss drawing or on supplemental documents;
11. Required permanent truss member bracing location; and
12. Layout design.

D. **<u>Section R504 Pressure Preserved Treated Wood Floors (on ground)</u>:** Delete this section.

E. **<u>Section R506.1 General</u>:** Amend to read as follows:
R506.1 General. Concrete slab-on-ground floors shall be a minimum 4 inches thick with a minimum of 6x6 welded wire fabric embedded in the mid cross section of the slab. The compressive strength of concrete shall be as set forth in Section R402.2. Fiber mesh can be used in place of welded wire.

F. **<u>Section R506.2.1.1 Back-Fill in Garages (attached)</u>:** Add a new section to read as follows:
R506.2.1.1 Back-Fill under Concrete Garage Floors (attached). The sub-base for poured concrete garage floors shall be undisturbed inorganic soil. All fill material shall be clean graded sand, crushed stones, or gravel. The use of any soils as fill material is prohibited. Compacted non-organic material can be used with dowelling #4 rebar into the foundation wall a minimum of 4 inches extending into the garage floor area a minimum of 3 feet, placed 24 inches on center around

the three (3) walls forming the garage area, may be used. Any practice of soaking the soils within this area will be done in strict conformance with the locally applicable water conservation ordinance and shall be metered.

Chapter 6 – Wall Construction:

A. **Section R602.2 Grade:** Amend to read as follows:
R602.2 Grade. Studs shall be a minimum No. 2, standard or stud grade lumber.

B. **Section R602.3.2 Top Plate:** Delete the exception.

C. **Table 602.10.2 Intermittent Bracing Methods:** Delete methods number four (4) **SFB** and five (5) **GB**.

Chapter 7 – Wall Covering:

No Changes.

Chapter 8 – Roof-Ceiling Construction:

A. **Section R802.10.1 Truss Design Drawings:** Amend to read as follows:
R802.10.1 Truss Design Drawings. (See Section R502.11.4, as amended by this ordinance.)

Chapter 9 – Roof Assemblies:

A. **Section R905.2.7.1 Ice Barrier:** Amend to read as follows:
R905.2.7.1 Ice Barrier. On all new roof construction and roof tear offs an ice protection barrier that consists of a self-adhering polymer modified bitumen sheet shall be used in lieu of normal underlayment and extend from the eave's edge to a point at least 24 inches inside the exterior wall line of the structure.

Chapter 10 – Chimneys and Fireplaces:

A. **Section R1003.9 Termination:** Amend to read as follows:
R1003.9 Termination. Chimneys shall extend at least 2 feet higher than any portion of a building within 10 feet, but shall not be less than 3 feet above the point where the chimney passes through the roof. All wood or solid fuel burning fireplaces and stoves shall be equipped with an approved spark arrestor.

Chapter 11 – Energy Efficiency:

No Changes.

Chapter 12 – Mechanical Administration:

No Changes.

Chapter 13 – General Mechanical System Requirements:

A. **Section M1307.3.2 Heating Units in Garages:** Add a new section to read as follows:

M1307.3.2 Heating Units in Garages. Units designed to heat the habitable space of the home shall not be located in a garage.

Chapter 14 – Heating and Cooling Equipment:

No Changes.

Chapter 15 – Exhaust Systems:

No Changes.

Chapter 16 – Duct Systems:

A. **Section M1602.2.1 Return Air Vents:** Add a new section to read as follows:
M1602.2.1 Return Air Vents. Return air vents connected to the heating and cooling system, shall be located in every habitable room of the home, except as prohibited in Section M1602.2 of the code.

Chapter 17 – Combustion Air:

No Changes.

Chapter 18 – Chimney and Vents:

No Changes.

Chapter 19 – Special Fuel – Burning Equipment:

No Changes.

Chapter 20 – Boilers/Water Heaters:

No Changes.

Chapter 21 – Hydronic Piping:

No Changes.

Chapter 22 – Special Piping and Storage Systems:

A. **Delete Chapter 22 in its entirety.**

Chapter 23 – Solar Systems:

No Changes.

Chapter 24 – Fuel Gas:

No Changes.

Chapters 25 through 32 – Plumbing:

A. To the extend there is any conflict between the provisions of Chapters 25 through 32 with the most current State of Illinois Plumbing Code as adopted and/or amended by the City of St. Charles, the most stringent provision shall apply.
(Ord. 2012-M-10 § 3.)

Chapters 33 through 42 – Electrical:

No Changes.

Chapter 43 – Referenced Standards:

No Changes.

Appendix Adoption:

Adopt the following Appendices:

Appendix A – Sizing and Capacities of Gas Piping
Appendix B – Sizing of Venting Systems – Appliances
Appendix C – Exit terminals of Mechanical Venting Systems
Appendix D – Procedure for Safety Inspection – Existing Appliances
Appendix F – Radon Control Systems – Delete Figure AF102
Appendix G – Swimming Pool, Spas, and Hot Tubs
Appendix J – Existing Buildings and Structures
Appendix K – Sound Transmissions
Appendix M – Home Day Care R-3 Occupancy

Delete the following Appendices:

Appendix E – Manufacturing Housing used as Dwellings
Appendix H – Patio Covers
Appendix I – Private Sewage Disposal
Appendix L – Permit Fee
Appendix N – Venting Methods (Plumbing)
Appendix O – Gray Water Recycling Systems
Appendix Q – Cross Reference – ICC International Residential Code Electrical Provisions/National Electrical Code

(Ord. 2010-M- 43 § 1; Ord. 2003-M-6 § 1; Ord. 1997-M-140 § 1; Ord. 1983-M-14 § 1 (part); Ord. 1978-M-19 § 1 (part): prior code § 13.102.2.)

15.04.030 International Mechanical Code 2009 – Regulations adopted and modified.

The provisions of the 2009 International Mechanical Code issued by the International Code Council Inc., 4051 West Flossmoor Road, Country Club Hills, Illinois 60478 not less than three (3) copies of which have been and are on file in the Office of the Clerk of the City of St. Charles, Illinois, for more than thirty days, together with the amendments listed herein, are hereby adopted.

Amendments to the 2009 International Mechanical Code:

Chapter 1 Administration – Delete the provisions of Section 106.4.3 “Expiration”; Section 106.4.4 “Extensions”; Section 106.5.3 “Fee Refunds”; Section 108.4 “Violation Penalties”; and Section 109 “Means of Appeal” as the City has adopted a separate Administrative Code under Municipal Code Chapter 15.101.

(Ord. 2010-M-45 § 1; Ord. 2004-M-63 § 1; Ord. 1993-M-59 § 1.)

15.04.035 International Fuel Gas Code 2009 – Regulations adopted and modified.

The provisions of the 2009 International Fuel Gas Code issued by the International Code Council Inc., 4051 West Flossmoor Road, Country Club Hills, IL 60478, not less than three (3) copies of which have been and are on file in the Office of the Clerk of the City of St. Charles, Illinois for more than thirty (30) days, together with the amendments listed herein, are hereby adopted.

Amendments to the 2009 International Fuel Gas Code:

1. Chapter 1 Scope and Administration. The City has adopted a separate Administrative Code under the Municipal Code Chapter 15.101.
   a. Section 106.5.3 "Expiration" – Delete in its entirety
   b. Section 106.5.4 "Extensions" – Delete in its entirety
   c. Section 106.6.3 "Fee Refunds" – Delete in its entirety
   d. Section 108.4 "Violation Penalties" – Delete in its entirety
   e. Section 109 "Means of Appeal" – Delete in its entirety
2. Chapter 4 Gas Piping Installations:
   a. Section 403.4.4 "Aluminum" – Delete in its entirety
   b. Section 403.5.3 "Aluminum Tubing" – Delete in its entirety
   c. Section 403.5.4 "Corrugated Stainless Steel Tubing" – Delete in its entirety.

(Ord. 2010-M-46 § 1; Ord. 2004-M-64 § 1.)

15.04.040 National Electrical Code 2008 – Regulations Adopted and Modified.

The provisions of the 2008 Edition of the National Electrical Code, NFPA 70, issued by the National Fire Protection Association, Inc., One Batterymarch Park, Quincy, Massachusetts, 02269 (hereinafter sometimes referred to as the "NEC") not less than three (3) copies of which have been and are on file in the Office of the Clerk of the City of St. Charles, Illinois, for more than thirty (30) days, together with the amendments listed herein, are hereby adopted.
(Ord. 2010-M-47 § 1; Ord. 2003-M-79 § 1; Ord. 1997-M-140 § 2; Ord. 1993-M-59 § 1.)

15.04.045 Amendments to the 2008 National Electric Code NFPA 70.

1. **Section 110.13 (A) Mounting:** Add a new paragraph to read as follows:
   (A) Mounting. All electric panels mounted on concrete or masonry walls that are either exterior walls or below grade, shall have a minimum of 1/2 inch plywood installed behind the panel, or the panel shall be mounted to structural mounting channel that provides a minimum 1/2 inch airspace between the panel and the wall, for the purposes of support and to help prevent moisture entering the panel. Such mounting shall allow panel replacement if required.
2. **Section 210.70 Lighting Outlets Required:** Add a new paragraph to read as follows:
   (D) Illumination of Mechanical Equipment. All occupancies shall have luminaries installed within four (4) feet of the front of all electric panels and within four (4) feet of mechanical heating equipment to enable servicing the equipment.
3. a. **Section 230.2 Number of Services, (B) Special Occupancies:** Add new paragraph to read as follows:
   (B) Special Occupancies. Multiple-occupancy buildings will have either an external building main disconnect, a key operated shunt trip main disconnect, or parallel key operated shunt trip main disconnects for all services supplied to the building. Parallel shunt trip key operated main disconnects must be provided and installed in a manner approved by the St. Charles Electric Utility.

b. **Section 230.3 One Building or Other Structures Not to be Supplied Through Another:** Revise by deleting and substituting the following:
230.3 One Building, or Other Structure, or Tenant Space, Not to be Supplied Through Another, Service conductors, feeders, or branch circuits of one building, or other structure, or tenant space shall not pass through the interior of another building, or structure, or other space.

c. **Section 230.6 Conductors Considered Outside the Building:** Add new paragraph to read as follows:
(5) Installed in any "common area" (hallway, corridor or common space accessible to multiple premises) that meets the construction requirements of a one-hour fire rating. Conductors shall be installed in solid metal raceway pipe within "common areas" and shall have a label every five (5) feet identifying the conductors within the conduit.

d. **Section 230.46 Spliced Conductors:** Revise by deleting and substituting the following:
230.46 Spliced Conductors. Splices in service entrance conductors, other than those installed by the Electric Utility, are not allowed.

e. **Section 230.70 General (A) Location, (1) Readily Accessible Location:** Revise by deleting and substituting the following:
(1) Readily Accessible Location. Service disconnecting means shall be provided either outside the building or via remote control at the Fire Control Panel and shall have provisions to allow the service to be locked open. Each building/tenant space shall have a main disconnect incorporated within the main distribution panel inside the space.

f. **Section 230.70 General (A) Location:** Add new paragraph to read as follows:
(4) Maximum Distance. Service conductors installed inside a building without over current protection shall not exceed five (5) feet in length.

g. **Section 230.79 Rating of Service Disconnecting Means (C) One Family Dwelling, (D) All Others:** Revise by deleting and substituting the following:
(C) One or Two Family Dwelling. All panel board installations for new single-family detached dwellings shall be a minimum of 200-ampere rated. The main service disconnecting means (circuit breaker or fused switch) shall be 200-ampere rated.
(D) Multi-family and Single-family Attached Dwellings. All panel board installations for new multi-family dwellings and new single family attached three (3) units or more dwelling units shall be a minimum of 100-ampere rated. The main service disconnecting means (circuit breaker or fused switch) shall be a minimum of 100-ampere rated.
(E) All Others. For all other installations, the service disconnecting means shall have a rating of not less than 60-ampere, unless approved by the City of St. Charles Municipal Electric Utility.

4. **Section 250.118 Types of Equipment Grounding Conductors:** Revise by deleting and substituting the following
250.118 Types of Equipment Grounding Conductors. The equipment grounding conductor must be a separate conductor run with the circuit conductors unless given exemption by the City of St. Charles Municipal Electric Utility or an approved certified testing agency.

5. a. **Section 300.1 Scope (A) All Wiring Installations:** Add new paragraph to read as follows:
(1) With the exception of one and two family dwellings, all current carrying conductors exceeding 50 volts shall be installed in rigid metal conduit, intermediate metallic conduit, electrical metallic tubing **or** flexible metallic tubing with the exception that PVC conduit can be used for corrosive or other special application areas.

b. **Section 300.5 Underground Installations, (D) Protection from Damage, (3) Service Conductors:** Revise by deleting and substituting the following:
(3) Service Conductors. Residential underground service conductors shall be installed in minimum Schedule 40 PVC. All other underground service conductors shall be installed in conduit that is encased in concrete unless given exemption by the City of St. Charles Municipal Electric Utility.

c. **Table 300.5 Minimum Cover Requirements, 0 to 600 Volts, Nominal, Burial in Millimeters (Inches):** Delete the third row table entries related to Under A Building.

d. **Table 300.5 Minimum Cover Requirements, 0 to 600 volts, Nominal, Burial in Millimeters (Inches):** Revise by deleting and substituting the fourth row to read as follows:
Table 300.5 Minimum Cover Requirements, 0 to 600 Volts, Nominal, Burial in Millimeters (Inches). Under minimum of 102 mm (4 inch) thick concrete interior or exterior slab with no vehicular traffic and the slab extending not less than 152 mm (6 inch) beyond the underground installation.

6. **Section 310.2 Conductors, (B) Conductor Material:** Revise by deleting and substituting the following:
(B) Conductor Material. Other than service conductors provided by the Utility, or Aerial, all service, feeder, and branch circuit conductors shall be copper.

7. a. **Section 314.3 Nonmetallic Boxes, 314.17 Nonmetallic Boxes and Conduit Bodies, 314.43 Nonmetallic Boxes, and 334.40 (A) Boxes of Insulating Materials:** Delete these sections.

b. **Section 334.40 (b) Devices of Insulating Material:** Revise by deleting and substituting the following:
(B) Devices of Insulating Material. Application of non-metallic equipment can be used for corrosive or other special application areas.

8. **Section 695.3 Power Source(s) for Electric Motor-Driven Fire Pumps, (B) Multiple Sources:** Add new paragraph to read as follows:
(4) Signage. Where a generator provides a secondary source for a fire pump, and the generator feeds other systems, clearly marked key operated shunt trip switch/es must be provided at the fire panel allowing Fire Department personnel the ability to open main breakers to panels not feeding the fire pump.

9. **Section 700.16 Emergency Illumination:** Add new paragraph to read as follows:
(1) Additional spaces that require emergency lighting shall include all restrooms and mechanical rooms.

10. a. **Article 701 Legally Required Standby Systems, I General, Section 701.7 Transfer Equipment:** Add new paragraph to read as follows:
(D) Transfer Equipment Requirements: Open type transfer switches are the only approved method for connection of standby systems. All transfer switch connections shall be "break before make" to insure the complete separation from the utility system and the generator supply. No parallel operation with the utility system shall be allowed. A minimum time delay of three (3) seconds and a maximum of ten (10) seconds after loss of utility power should be established before starting the generator. Utilization of Kirk Key systems or other mechanical means of isolating generating sources from the utility source are not allowed.

b. **Article 701 Legally Required Standby Systems, III Sources of Power, Section 701.11 Legally Required Standby Systems (B) Generator Set:** Add new paragraph to read as follows:
(6) Generator Noise Output. The maximum noise level allowable within ten (10') feet of transformer, switchgear, or other specified equipment operated by the City of St. Charles Municipal Electric Utility (SCMEU) is 80dBA. Sound enclosures or sound

barrier walls or other sound mitigation may be required if the noise level near SCMEU equipment exceeds 80dBA. Analysis of the need for sound abatement equipment will be performed by the City of St. Charles Municipal Electric Utility personnel after the generator is installed and tested.

(Ord. 2010-M-47 § 1; Ord. 2003-M-79 § 2.)

15.04.050 Plumbing Code: Adopted – Modifications

The provisions of the 2004 Edition of the Illinois Plumbing Code compiled by the Illinois Department of Public Health, not less than three (3) copies of which have been and are on file in the Office of the Clerk of the City of St. Charles, Illinois, for more than thirty (30) days, are hereby adopted together with the amendments listed below modifying said Illinois Plumbing Code, as the regulations governing the installation of plumbing in and around buildings within the jurisdiction of the City of St. Charles.

Amendments to the Illinois Plumbing Code – 2004 Edition.

1. Section 890.170 – Revise by deleting and substituting the following:
   Section 890.170 Sewer and/or Water Required. Each building which is intended for human habitation or occupancy shall have a connection to a public water system and a connection to a public sewer system. Provided, however, that if a public water or public sewer system is not available and accessible within two-hundred (200') feet of the property line of the structure to be served, as determined by the Building & Code Enforcement Division Manager, the owner may connect to a private water well constructed in accordance with the requirements of Illinois Water Well Construction Code 77 Illinois Administrative Code 920 and the St. Charles Municipal Code, Title 13, "Public Utilities," Chapter 13.16, "Water;" and/or a private sewage disposal system constructed in accordance with the requirements of the 77 Illinois Administration Code 905 and the St. Charles Municipal Code, Title 13, "Public Utilities," Chapter 13.12, "Sewers." All installations shall be in accordance with applicable state and local laws, ordinances, resolutions, rules and regulations and codes."
2. Section 890.520 b) Gasoline, Oil and Flammable Liquids, revise to read:
   b) Interceptors/Separators Required.
   All facilities which generate oil and/or flammable waste shall be provided with floor drains or trench drains connected to an approved gas and oil interceptor. All residential garages with floor drains shall have proper size interceptor regardless of size of garage.

   Enclosed loading docks, commercial vehicle storage or repair garage and gasoline stations with grease racks or pits and all facilities that have oil and/or flammable waste shall be provided with floor drains. Floor drains provided for such areas shall be intercepted by an approved interceptor or a series of three (3) basins before discharging into the building drainage system and shall be of cast iron or equally durable materials. Each interceptor or basin shall be provided with a heavy metal cover that shall be bolted into place and made gas and water tight with a soft metal gasket. Each interceptor and, if provided with separate compartments, each compartment and basin shall be provided with a vent of not less than two (2") inches. Two or more vents may be connected to a header that shall be six (6") inches or higher than the lowest floor drain served. The vent shall extend independently to the outer air. The outlet of an interceptor or each basin shall be properly trapped. Floor drains above the level of the interceptor or basins shall connect to a stack extending independently to the outer air.

   Where it is required by this Section to have interceptors/separators, individual units shall be installed and maintained as a single user system. The interconnecting of piping from one (1)

building to another or from one (1) unit to another where such units are separated by an approved firewall assembly is prohibited.

3. Section 890.520 d) General Requirements, add a paragraph 10) as follows:
   10) Where it is required by this Section to have interceptors/separators, individual units shall be installed and maintained as a single user system. The interconnecting of piping from one (1) building to another or from one (1) unit to another where such units are separated by an approved firewall assembly is prohibited.
4. Section 890.630 Installation, add a paragraph j) as follows:
   j) A safe pan or an approved drainage system is required for any floor (exception of basement level) clothes washer and water heater installations and above ceiling water heater and furnace installations.
5. Section 890.1130 d) Fire Safety Systems, add a paragraph 4) as follows:
   4. The installation of a fire safety system involving the potable water system shall be in accordance with NFPA Standard No. 13 (1975) and the potable water supply system shall be protected against backflow or back siphonage by a minimum of a double check valve assembly. If a fire department connection is part of the fire safety system; the potable water supply system must be protected by an approved backflow device.
6. Section 890.1320 Drainage System Installation, add paragraph p) and q) as follows:
   p) Underground plumbing must have proper support and anchor system in order to maintain proper drainage.
   q) Compliance with the St. Charles Municipal Code, Title 13 "Public Utilities", Chapter 13.12 "Sewers", Section 13.12.201 "Overhead Sanitary Sewers" is required.
7. Section 890.1340 Determination of Sizes for Drainage System, revise paragraph (b) to read:
   b) Minimum Size of Building Drain, Horizontal Branches, Drainage Piping
   1. No portion of the drainage system installed underground or below a basement or cellar shall be less than four (4) inches in diameter.
8. Section 890.1440 Vent terminal size, revise a) to read:
   a) Minimum Size of Stack Vent. Each structure in which building drains are installed shall have one (1) stack vent not less than three (3") inches in diameter. The stack vent shall be increased by one size through the roof, but in no case shall any vent be less than four (4") inches where it passes through the roof to the outside atmosphere. See Appendix A, Table H.

(Ord. 2010-M-48 § 1; Ord. 2006-M-58 § 1-4; Ord. 2003-M-5 § 1; Ord. 1997-M-140 § 2; Ord. 1991-M-3 § 1; Ord. 1982-M-14 § 1; Ord. 1978-M-19 § 1 (part): prior code § (3.102.5.)

15.04.055 International Energy Conservation Code 2012 – Regulations Adopted and Modified.

The provisions of the 2012 International Energy Conservation Code issued by the International Code Council, Inc., 4051 West Flossmoor Road, Country Club Hills, IL 60478, not less than three (3) copies of which have been and are on file in the Office of the Clerk of the City of St. Charles, Illinois, for more than thirty (30) days, as hereby adopted.
(Ord. 2013-M-20 § 1; Ord. 2012-M-44 § 2.)

15.04.060 Building permit - required.

It is unlawful to construct any building or structure in the city where the cost of such construction exceeds one hundred dollars or to alter or remodel any building or structure so as to change the bearing walls, beams, supports, or the roof thereof, without having first procured a permit therefore.
(Ord. 1978-M-21 § 1 (part): prior code § 13.101.)

15.04.090 Architectural committee - created - composition - duty.

There is created an architectural committee to consist of three members who shall be appointed for a term of three years by the mayor by and with the advice and consent of the city council. It shall be the

duty of such committee to assist the building commissioner in ascertaining if the plans required in Section 15.04.070 comply with the provisions of the ordinances relating to the construction of buildings.
(Prior code § 13.104.)

15.04.105 Flood damage prevention.

The requirements under Title 18, Flood Damage Prevention, shall be followed in connection with all proposed construction, substantial improvements, or other development within floodplain areas.
(Ord. 1981-M-32 § 6.)

15.04.120 Time limit.

No building permit shall be valid for a period of more than one year from the date of issuance.
(Prior code § 13.108.)