ST. CHARLES SINCE 1834	**HISTORIC PRESERVATION COMMISSION AGENDA ITEM EXECUTIVE SUMMARY**			
	Agenda Item Title/Address:	COA: 1 E. Main St. (accessibility ramp)		
	Proposal:	Construct accessibility ramp to rear entrance from parking lot		
	Petitioner:	Doug Gilbert		
	Please check appropriate box (x)			
	PUBLIC HEARING		**MEETING 6/19/13**	**X**

AGENDA ITEM CATEGORY:			
X	Certificate of Appropriateness (COA)		Façade Improvement Plan
	Preliminary Review		Landmark/District Designation
	Discussion Item		Commission Business

ATTACHMENTS:

Photos of proposed location

Plans for proposed ramp

EXECUTIVE SUMMARY:

Harris Bank is proposing to install an accessibility ramp from their rear parking lot up to the rear/south facing entrance to the building. Plans are attached.

The location is currently a mulched area.

RECOMMENDATION / SUGGESTED ACTION:

Provide feedback and recommendations for approval of the COA.

BMO

DOUGLAS E. GILBERT ARCHITECT

220 South Maple Avenue #41/Oak Park, Illinois 60302/708.660.1749/dgilbertarchitect@att.net

7 June 2013

Russell Colby
Planning Division Manager
City of St. Charles
2 East Main St.
St. Charles, IL 60174

Re: BMO-Harris Bank, 1 East Main, Proposed Ramp

Dear Mr. Colby:

I am working on behalf of Whitney Architects and its client to assist in obtaining historic approval for a proposed new ramp at the BMO-Harris Bank facility, 1 East Main Street. Although the building was built in 1965 and is less than 50 years old, it is located in the Central Historic District and any exterior work must be reviewed by the Historic Preservation Commission.

The proposed ramp is located at the rear of the building and is not generally visible from the street. As shown in the attached drawings and photos, the ramp will be discreetly placed next to an existing stair and under the building's overhang and within its overall footprint. No significant existing exterior features will be removed by this project. The project also includes some site work to improve the accessibility of existing sidewalks and parking.

It is my understanding that the Commission next meets on June 19 at 7:00pm. If full Commission review is required, I ask that we be placed on that agenda. I will be available to attend the meeting and answer any questions.

The project will be submitted for a building permit separately.

If you have any questions or need more information, please feel free to contact me.

Sincerely,

Douglas E. Gilbert, AIA

cc: Melissa Bogusch, AIA - Whitney Architects

Attached: Google Map Location, Google Map Photo 2, Photo Ramp Location
Drawings: C1.0, C2.0, C3.0, C4.0, C5.0

To see all the details that are visible on the screen, use the "Print" link next to the map.

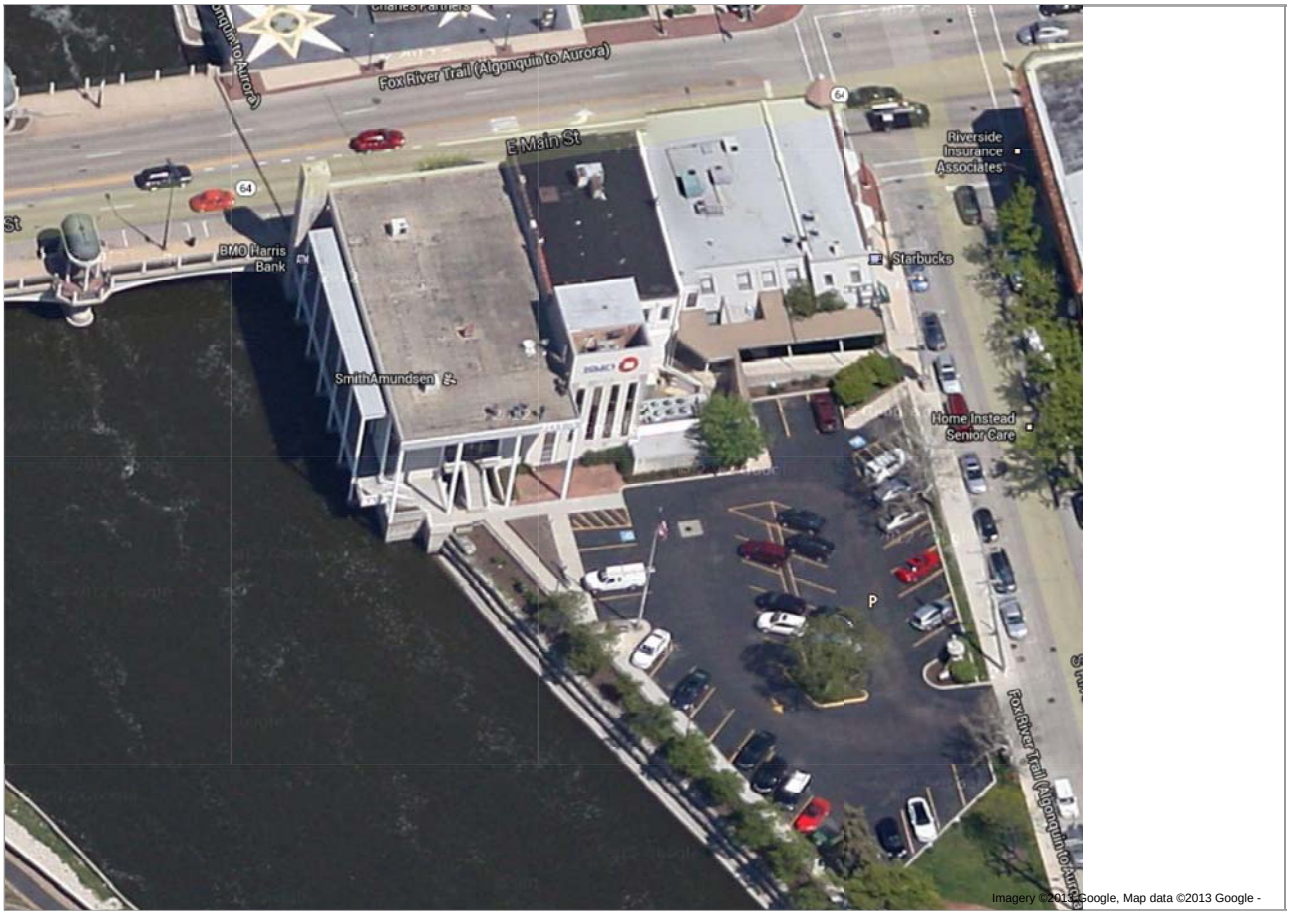

To see all the details that are visible on the screen, use the "Print" link next to the map.

1 EAST MAIN STREET
ST. CHARLES, IL

PROPOSED RAMP FOR
BMO-HARRIS BANK

JUNE 7 2013

PREPARED BY
DOUGLAS GILBERT ARCHITECT
FOR WHITNEY ARCHITECTS

1. EXISTING SITE TOPOGRAPHY, UTILITIES, RIGHT-OF-WAY AND HORIZONTAL CONTROL SHOWN ON THE DRAWINGS WERE OBTAINED FROM A SURVEY PREPARED BY:

V3 COMPANIES OF ILLINOIS LTD.
7325 JANES AVENUE
WOODRIDGE, IL 60517

COPIES OF THE SURVEY ARE AVAILABLE FROM THE ENGINEER. SITE CONDITIONS MAY HAVE CHANGED SINCE THE SURVEY WAS PREPARED. CONTRACTORS TO VISIT SITE TO FAMILIARIZE THEMSELVES WITH THE CURRENT CONDITIONS.

2. ALL EXISTING TOPOGRAPHY, UNDERGROUND UTILITIES, STRUCTURES AND ASSOCIATED FACILITIES SHOWN ON THESE DRAWINGS HAVE BEEN PLOTTED FROM AVAILABLE SURVEYS AND RECORDS. THEREFORE, THEIR LOCATIONS AND ELEVATIONS MUST BE CONSIDERED APPROXIMATE ONLY. THERE MAY BE OTHER FACILITIES, THE EXISTENCE OF WHICH ARE NOT PRESENTLY KNOWN.

3. CONTRACTOR IS TO VERIFY ALL EXISTING STRUCTURES AND FACILITIES AND NOTIFY ENGINEER OF ANY DISCREPANCIES PRIOR TO ORDERING MATERIAL AND STARTING WORK.

4. ALL ELEVATIONS ARE BASED ON USGS DATUM. BENCHMARK LOCATIONS AND ELEVATIONS ARE SHOWN ON PLANS.

5. ALL APPLICABLE PROVISIONS OF THE CURRENT OCCUPATIONAL SAFETY AND HEALTH ACT ARE HEREIN INCORPORATED BY REFERENCE.

6. THE CONTRACTOR SHALL SUBSCRIBE TO ALL GOVERNING REGULATIONS AND SHALL OBTAIN ALL NECESSARY PUBLIC AGENCY PERMITS PRIOR TO STARTING WORK. THE CONTRACTOR, BY USING THESE PLANS FOR THEIR WORK, AGREE TO HOLD HARMLESS V3 COMPANIES OF ILLINOIS LTD., THE MUNICIPALITY, THEIR EMPLOYEES AND AGENTS AND THE OWNER WHILE ACTING WITHIN THE SCOPE OF THEIR DUTIES FROM AND AGAINST ANY AND ALL LIABILITY, CLAIMS, DAMAGES, AND THE COST OF DEFENSE ARISING OUT OF CONTRACTOR(S) PERFORMANCE OF THE WORK DESCRIBED HEREIN, BUT NOT INCLUDING THE SOLE NEGLIGENCE OF THE OWNER, HIS AGENTS, THE ENGINEER, HIS EMPLOYEES AND AGENTS.

7. EXCEPT WHERE MODIFIED BY THE CONTRACT DOCUMENTS, ALL WORK PROPOSED HEREON SHALL BE IN ACCORDANCE WITH THE FOLLOWING SPECIFICATIONS WHICH ARE HEREBY MADE A PART HEREOF:

a. "STANDARD SPECIFICATIONS FOR ROAD AND BRIDGE CONSTRUCTION IN ILLINOIS," AS PREPARED BY IDOT, LATEST EDITION.

b. "STANDARD SPECIFICATIONS FOR WATER AND SEWER MAIN CONSTRUCTION IN ILLINOIS AS PUBLISHED BY THE IEPA," LATEST EDITION.

c. ILLINOIS RECOMMENDED STANDARDS FOR SEWAGE WORKS,' AS PUBLISHED BY THE IEPA. LATEST EDITION.

d. THE LATEST EDITIONS OF THE SUBDIVISION CODE AND STANDARDS OF THE CITY OF ST. CHARLES.

e. THE NATIONAL ELECTRIC CODE.

f. ILLINOIS CLEAN CONSTRUCTION AND DEMOLITION DEBRIS REQUIREMENTS SPECIFIED AT 415ILCS 5/22.51 AND 35 IAC PART IL20.

IN THE EVENT OF CONFLICTING SPECIFICATIONS WITH REGARD TO SITEWORK ISSUES DESIGNED BY THE ENGINEER, THE MORE STRINGENT REQUIREMENT SHALL GOVERN.

8. NO BURNING OR INCINERATION OF RUBBISH WILL BE PERMITTED ON SITE.

9. THE CONTRACTOR SHALL PROVIDE FOR THE SAFE AND ORDERLY PASSAGE OF TRAFFIC AND PEDESTRIANS WHERE HIS/HER OPERATIONS ABUT PUBLIC THOROUGHFARES AND ADJACENT PROPERTY IN ACCORDANCE WITH LOCAL ORDINANCE AND IDOT REQUIREMENTS.

10. BEFORE EXCAVATING OVER OR ADJACENT TO ANY EXISTING UTILITIES, CONTRACTOR SHALL NOTIFY THE OWNER OF SUCH UTILITIES TO ENSURE THAT PROTECTIVE WORK WILL BE COORDINATED AND PERFORMED BY THE CONTRACTOR IN ACCORDANCE WITH THE REQUIREMENTS OF THE OWNER OF THE UTILITY INVOLVED. IF ANY EXISTING SERVICE LINES, UTILITIES AND UTILITY STRUCTURES WHICH ARE TO REMAIN IN SERVICE ARE UNCOVERED OR ENCOUNTERED DURING THIS OPERATION, THEY SHALL BE SAFEGUARDED, PROTECTED FROM DAMAGE AND SUPPORTED IF NECESSARY.

11. ALL COORDINATES REFER TO BACK OF CURB, CENTERLINE OF MANHOLE, PIPE, OR STRUCTURE UNLESS OTHWERWISE SHOWN.

12. ALL CURB RADII REFER TO BACK OF CURB.

13. THE CONTRACTOR SHALL NOTIFY THE MUNICIPALITY 48 HOURS PRIOR TO COMMENCING ANY WORK AND FOR ANY NEW CONSTRUCTION REQUIRING INSPECTION.

14. AREAS OUTSIDE THE R.O.W. LINE OR CONSTRUCTION LIMIT LINE IMPACTED BY OPERATIONS OF THE CONTRACTOR SHALL BE RETURNED TO THE STATE IT WAS FOUND PRIOR TO NEW CONSTRUCTION, EXCEPT WHERE NEW WORK IS SHOWN.

15. STREET PAVING AND CURBS TO REMAIN SHALL BE PROTECTED FROM DAMAGE AND IF DAMAGED, SHALL BE REPLACED PROMPTLY IN CONFORMANCE WITH THE MUNICIPALITY OR IDOT STANDARD SPECIFICATIONS IN MATERIALS AND WORKMANSHIP.

16. PROPOSED ELEVATIONS INDICATE FINISHED CONDITIONS. FOR ROUGH GRADING ELEVATIONS ALLOW FOR THICKNESS OF PROPOSED PAVING (ROADS, WALKS, DRIVES, ETC.) OR TOPSOIL AS INDICATED ON DRAWINGS.

17. PROVIDE TRENCH BACKFILL IN ACCORDANCE WITH THE DETAILS OF THE PLANS FOR ALL UTILITY LINES (OR AS OTHERWISE NOTED ON PLANS). BACKFILL SHALL BE PLACED AND COMPACTED PER THE MUNICIPALITY AND IDOT SPECIFICATIONS.

18. BACKFILL SHALL BE PLACED NEXT TO THE CURB AS SOON AS PERMISSIBLE AFTER CONSTRUCTION TO PREVENT SCOURING AND UNDER CUTTING BY STORM WATER RUNOFF.

19. CONTRACTOR SHALL MAINTAIN ACCURATE RECORDS OF ALL UNDERGROUND UTILITY CONSTRUCTION AND SUBMIT 'RECORD' INFORMATION TO ENGINEER FOR USE IN PREPARING 'RECORD DRAWINGS'.

20 ALL BUTT JOINTS AS SHOWN ON THE PLANS AND AS DIRECTED BY THE ENGINEER SHALL BE CONSTRUCTED BY MILLING AND SHALL BE CONSIDERED INCIDENTAL TO THE COST OF THE BITUMINOUS SURFACE COURSE.

21. ALL TREES TO BE SAVED SHALL BE IDENTIFIED PRIOR TO CONSTRUCTION BY THE LANDSCAPE ARCHITECT AND SHALL BE PROTECTED PER IDOT SECTION 201.05. THE RIGHT-OF-WAY LINE AND LIMITS OF THE CONTRACTOR'S OPERATIONS SHALL BE CLEARLY DEFINED THROUGHOUT THE CONSTRUCTION PERIOD. ALL TREES NOTED TO REMAIN SHALL BE PROTECTED FROM DAMAGE TO TRUNKS, BRANCHES AND ROOTS. NO EXCAVATING, FILLING OR GRADING IS TO BE DONE INSIDE THE DRIP LINE OF TREES UNLESS OTHERWISE INDICATED.

22. FINAL ADJUSTMENT OF FIRE HYDRANTS, VALVE VAULTS AND MANHOLES ARE INCIDENTAL TO THEIR COST.

23. CONSTRUCTION ACCESS POINTS TO THE SITE SHALL BE PROTECTED IN SUCH A WAY AS TO PREVENT ACCUMULATION OF MUD OR SOIL ON PUBLIC THOROUGHFARES. AT THE END OF EACH DAY AND AS OFTEN AS NECESSARY THE CONTRACTOR SHALL CLEAN UP ALL MUD OR SOIL WHICH HAS BEEN TRACKED ONTO PUBLIC STREETS OR AS REQUIRED BY STATE AND VILLAGE OFFICIALS.

24. THE CONTRACTOR SHALL BE RESPONSIBLE FOR EROSION AND SEDIMENTATION CONTROL AS SHOWN ON THESE DRAWINGS.

25. ALL UTILITY CONNECTIONS TO EXISTING LINES SHALL BE CONSTRUCTED IN ACCORDANCE WITH THE REGULATIONS AND TO THE SATISFACTION OF THE UTILITY OWNER.

26. FOR REGULATED UTILITY LOCATIONS, THE CONTRACTOR SHALL CONTACT THE JOINT UTILITY LOCATION INFORMATION FOR EXCAVATORS, "J.U.L.I.E." AT 1-800-892-0123. LOCAL GOVERNMENT AGENCIES SHOULD BE CONTACTED BY THE CONTRACTOR FOR LOCATION OF ALL NONREGULATED UTILITY LOCATIONS. PLEASE CALL FOR LOCATES 48 HOURS IN ADVANCE OF CONSTRUCTION.

27. WHEN AN EXISTING DRAINAGE ROUTE, EITHER A STORM SEWER OR WATERWAY, IS INTERRUPTED DUE TO THE SEWER INSTALLATION, THE DRAINAGE ROUTE SHALL BE REESTABLISHED TO ORIGINAL CONDITIONS BY THE END OF THE SAME WORK DAY. DRAINAGE MUST BE MAINTAINED AT ALL TIMES DURING CONSTRUCTION.

28. ANY DAMAGE TO EXISTING UTILITIES SHALL BE REPAIRED BY THE UTILITY COMPANY AT THE CONTRACTOR'S EXPENSE.

29. THE GENERAL CONTRACTOR SHALL COORDINATE WITH UTILITY COMPANIES TO PROVIDE CABLE TV, PHONE, ELECTRIC, GAS AND IRRIGATION SERVICES. GENERAL CONTRACTOR SHALL BE RESPONSIBLE FOR SECURING SITE LAYOUTS FOR THESE UTILITIES AND SHALL COORDINATE AND PROVIDE CONDUIT CROSSINGS AS REQUIRED. THIS COORDINATION SHALL BE CONSIDERED INCIDENTAL TO GENERAL CONTRACTOR WITH OWNER. ANY CONFLICTS IN UTILITIES SHALL BE CORRECTED BY THE GENERAL CONTRACTOR AT NO ADDITIONAL COST TO OWNER.

30. AN INSPECTION OF THE SUBGRADE WILL BE MADE BY PERFORMING A PROOFROLL TEST IN THE PRESENCE OF THE MUNICIPAL ENGINEERING DEPARTMENT INSPECTOR. THE SUBGRADE MUST BE APPROVED PRIOR TO PLACING ANY TYPE OF CURB AND GUTTER, GEOTEXTILE STABILIZATION FABRIC OR BASE MATERIAL.

31. PROVIDE SMOOTH VERTICAL CURVES THROUGH HIGH AND LOW POINTS INDICATED BY SPOT ELEVATIONS. PROVIDE UNIFORM SLOPES BETWEEN NEW AND EXISTING GRADES. AVOID RIDGES AND DEPRESSIONS.

32. ASPHALT JOINTS FOR BINDER AND SURFACE COURSES ARE TO BE STAGGERED.

33. THE CONTRACTOR IS RESPONSIBLE FOR HAVING A SET OF 'APPROVED' ENGINEERING PLANS WITH THE LATEST REVISION DATE ON THE JOB SITE PRIOR TO THE START OF CONSTRUCTION.

34. NO HOLES ARE TO BE LEFT OPEN IN THE PAVEMENT OR PARKWAY OVER A HOLIDAY, WEEKEND OR AFTER 3:00 P.M. ON THE DAY PRECEDING A HOLIDAY OR A WEEKEND.

35. ALL EXISTING PAVEMENT OR CONCRETE TO BE REMOVED SHALL BE SAWCUT ALONG LIMITS OF PROPOSED REMOVAL BEFORE COMMENCEMENT OF PAVEMENT REMOVAL.

36. BAND'SEAL CONNECTORS OR EQUIVALENT SHALL BE USED TO JOIN PIPES OF DISSIMILIAR MATERIAL.

37. COPIES OF SOILS INVESTIGATION REPORTS MAY BE OBTAINED FROM THE OWNER. ANY BRACING, SHEETING OR SPECIAL CONSTRUCTION METHODS DEEMED NECESSARY BY THE CONTRACTOR IN ORDER TO INSTALL THE PROPOSED IMPROVEMENTS SHALL BE CONSIDERED INCIDENTAL TO THE COST OF THE PROJECT. ANY ADDITIONAL SOILS DATA NEEDED TO CONFIRM THE CONTRACTOR'S OPINIONS OF THE SUBSOIL CONDITIONS SHALL BE DONE AT THE CONTRACTOR'S EXPENSE. THE CONTRACTOR SHALL OBTAIN THE OWNER'S WRITTEN AUTHORIZATION TO ACCESS THE SITE TO CONDUCT A SUPPLEMENTAL SOILS INVESTIGATION.

38. THE CONTRACTOR SHALL BE RESPONSIBLE FOR OBTAINING ALL REQUIRED PERMITS FOR CONSTRUCTION ALONG OR ACROSS EXISTING STREETS OR HIGHWAYS. CONTRACTOR SHALL MAKE ARRANGEMENTS FOR THE PROPER BRACING, SHORING AND OTHER REQUIRED PROTECTION OF ALL ROADWAYS BEFORE CONSTRUCTION BEGINS AND SHALL BE RESPONSIBLE FOR ANY DAMAGE TO THE STREETS OR ROADWAYS AND ASSOCIATED STRUCTURES AND SHALL MAKE REPAIRS AS NECESSARY TO THE SATISFACTION OF THE OWNER OF THE ROADWAY.

39. THE CONTRACTOR SHALL BE RESPONSIBLE FOR THE INSTALLATION AND MAINTENANCE OF ADEQUATE SIGNS, TRAFFIC CONTROL DEVICES AND WARNING DEVICES TO INFORM AND PROTECT THE PUBLIC DURING ALL PHASES OF CONSTRUCTION. BARRICADES AND WARNING SIGNS SHALL BE PROVIDED IN ACCORDANCE WITH ARTICLE 107.14 OF THE IDOT STANDARD SPECIFICATIONS. ALL TRAFFIC CONTROL WORK SHALL BE DONE IN ACCORDANCE WITH IDOT "MANUAL ON UNIFORM TRAFFIC CONTROL DEVICES.'

40. REMOVED PAVEMENT, SIDEWALK, CURB AND GUTTER, ETC. SHALL BE DISPOSED OF BY THE CONTRACTOR AT HIS OWN EXPENSE. THE CONTRACTOR SHALL BE RESPONSIBLE FOR PROVIDING AN OFF-SITE DUMP SITE AT HIS OWN EXPENSE.

41. ALL FIELD TILE ENCOUNTERED DURING CONSTRUCTION OPERATIONS SHALL BE CONNECTED TO THE PROPOSED STORM SEWER OR EXTENDED TO OUTLET INTO A PROPOSED DRAINAGE WAY AS DETERMINED BY THE ENGINEER. IF THIS CANNOT BE ACCOMPLISHED, THEN IT SHALL BE REPAIRED WITH NEW PIPE OF SIMILAR SIZE AND MATERIAL TO THE ORIGINAL LINE AND PUT IN ACCEPTABLE OPERATIONAL CONDITION. A RECORD OF THE LOCATION OF ALL FIELD TILE FOR ON-SITE DRAIN PIPE ENCOUNTERED SHALL BE KEPT BY THE SUBCONTRACTOR AND SUBMITTED TO THE ENGINEER UPON COMPLETION OF THE PROJECT. ALL FIELD TILE REPAIRS MUST MEET THE ILLINOIS URBAN MANUAL SPEC 945. THE COST OF THIS WORK SHALL BE CONSIDERED AS INCIDENTAL TO THE CONTRACT AND NO ADDITIONAL COMPENSATION WILL BE PROVIDED.

42. THE ENGINEER AND OWNER ARE NOT RESPONSIBLE FOR THE CONSTRUCTION MEANS, METHODS, TECHNIQUES, SEQUENCES OR PROCEDURES, TIME OF PERFORMANCE, PROGRAMS OR FOR ANY SAFETY PRECAUTIONS USED BY THE CONTRACTOR. THE CONTRACTOR IS SOLELY RESPONSIBLE FOR EXECUTION OF HIS/HER WORK IN ACCORDANCE WITH THE CONTRACT DOCUMENTS AND SPECIFICATIONS.

43. EXCEPT WHERE MODIFIED BY THE CONTRACT DOCUMENTS THE CONTRACTOR SHALL BE RESPONSIBLE FOR ONLY ENVIRONMENTAL TESTING REQUIRED TO CHARACTERIZE SOILS LEAVING SITE TO DETERMINE WHETHER SUCH SOILS MUST BE MANAGED AS "UNCONTAMINATED SOILS".

WATERMAIN DISTRIBUTION SYSTEM

1. ALL WATER LINES ARE TO BE PRESSURE TESTED AND CHLORINATED PER THE REQUIREMENTS OF THE MUNICIPALITY AND THE ILLINOIS ENVIRONMENTAL PROTECTION AGENCY.

2. WATER MAIN SHALL BE DUCTILE IRON PIPE, CLASS 52 CONFORMING TO ANSI A21.51 (AWWA C151) WITH CEMENT LINING CONFORMING TO ANSI A21.4 (AWWA C104) AND PUSH-ON JOINTS CONFORMING TO ANSI A21.11 (AWWA C111).

3. MINIMUM COVER OVER WATER MAIN SHALL BE 5' 6" FROM FINISHED GRADE TO TOP OF PIPE. MAXIMUM COVER SHALL BE 8'- 0" FROM FINISHED GRADE TO TOP OF PIPE.

4. VALVE VAULTS SHALL BE USED AT ALL VALVE LOCATIONS WHERE WATER MAIN IS 8" DIAMETER OR LARGER. VAULTS SHALL BE PRECAST CONCRETE STRUCTURES, WITH APPROPRIATE FRAME AND LIDS (SEE CONSTRUCTION DETAIL SHEETS). LIDS SHALL BE IMPRINTED "WATER".

5. THRUST BLOCKING SHALL BE INSTALLED ON WATER MAINS AT ALL BENDS, TEES, ELBOWS, ETC. COST OF SAME SHALL BE INCIDENTAL TO THE UNIT PRICE FOR PIPE INSTALLED.

SANITARY SEWER

1. ALL SANITARY SEWER SHALL BE TESTED FOR ACCEPTANCE IN ACCORDANCE WITH THE STANDARD SPECIFICATIONS FOR WATER AND SEWER MAIN CONSTRUCTION IN ILLINOIS, SECTION 31-1.11B. CONTRACTOR SHALL VERIFY THAT THE TESTING METHODS DESIGNATED HEREIN ARE ACCEPTABLE TO LOCAL AUTHORITIES HAVING JURISDICTION OVER THIS PROJECT.

2. SANITARY SEWERS SHALL BE CONSTRUCTED OF THE FOLLOWING MATERIALS AS SPECIFIED ON THE PLANS:

a. POLYVINYL CHLORIDE PLASTIC SEWER PIPE (PVC) CONFORMING TO ASTM D2241 WITH AN SDR OF 26 WITH ELASTOMETRIC GASKET JOINTS CONFORMING TO ASTM D3139.

b. DUCTILE IRON PIPE CONFORMING TO ANSI A21.51 (AWWA C151) WITH JOINTS CONFORMING TO ANSI 21-11 (AWWA C-111).

STORM SEWER

1. UNLESS OTHERWISE INDICATED ON THE PLANS, STORM SEWER PIPE SHALL BE REINFORCED CONCRETE PIPE IN CONFORMANCE WITH IDOT STANDARD SPECIFICATIONS DETERMINATION FOR PIPE CLASS, AND CONFORMING TO ASTM C76. ALL STORM SEWER SHALL HAVE GASKET D JOINTS CONFORMING TO ASTM C-361.

2. STORM SEWER STRUCTURES SHALL BE PRECAST OF THE TYPE AND DIAMETER AS SPECIFIED IN THE PLANS WITH APPROPRIATE FRAME AND LIDS (SEE CONSTRUCTION DETAIL). LIDS SHALL BE IMPRINTED "STORM".

LEGEND

EXISTING	PROPOSED	DESCRIPTION
		RIGHT-OF-WAY LINE
		PROPERTY LINE (EXTERIOR)
		LOT LINE (INTERIOR)
		EASEMENT LINE
		FENCE LINE
		CENTERLINE
		PROPERTY CORNER
710	710	CONTOUR
		CURB & GUTTER
		DEPRESSED CURB & GUTTER
		REVERSE PITCHED CURB
x 706.00	x 706.0	SPOT ELEVATION
782.62 / 782.12	782.62 / 782.12	TOP OF CURB ELEVATION / EDGE OF PAVEMENT ELEVATION
		UTILITY STUB
		SANITARY SEWER
		SANITARY FORCE MAIN
		STORM SEWER
W	W	WATER MAIN
G	G	GAS MAIN
T/E	T/E	UNDERGROUND TELEPHONE & ELECTRIC DUCT BANK
E	E	BURIED CABLE-ELECTRIC
T	T	BURIED CABLE-TELEPHONE
		UTILITY STRUCTURE WITH CLOSED LID
		CURB INLET
		DRAINAGE STRUCTURE WITH OPEN LID
		FIRE HYDRANT
		VALVE IN VALVE BOX
		GATE VALVE IN VALVE VAULT
		POST INDICATOR VALVE
		THRUST BLOCK
12" / 11		TREE
		TREE LINE
		CONCRETE HEADWALL
		SUBMERGED HEADWALL
		FLARED END SECTION (F.E.S.)
		GUY WIRES
		FLOOD LIGHT
		UTILITY POLE
		LIGHT STANDARD
		TRAFFIC SIGNAL POLE
		HAND HOLE
		SOIL BORING
		IRRIGATION HEADS
		SIGN
T	T	TELEPHONE MANHOLE
M	M	MONITORING WELL
T	T	TELEPHONE PEDESTAL
TP	TP	TRANSFORMER PAD
		UTILITY TO BE ABANDONED
	12"	FEATURE TO BE REMOVED
		STORMWATER FLOW DIRECTION
		STORMWATER OVERFLOW ROUTE
		DITCH CHECK
		INLET FILTER BASKET
		RIP RAP
		BOLLARD
SF	SF	SILT FENCE
		WATER MAIN PROTECTION
		TRENCH BACKFILL
	C01	UTILITY CROSSING LABEL
		GUARDRAIL
		RAILROAD TRACKS
		RETAINING WALL
		REVISION DELINEATION
	CLL	CONSTRUCTION LIMIT LINE
		TREE PROTECTION FENCE

ABBREVIATIONS

A	ARC LENGTH
B-B	BACK TO BACK OF CURB
B/C	BACK OF CURB
BLDG	BUILDING
BM	BENCHMARK
B/P	BOTTOM OF PIPE
BV/VV	BUTTERFLY VALVE IN VALVE VAULT
C & G	CURB AND GUTTER
CB	CATCH BASIN
℄	CENTERLINE
CL	CLOSED LID
CO	CLEAN OUT
DIP	DUCTILE IRON PIPE
DIA	DIAMETER
DIWM	DUCTILE IRON WATER MAIN
DWG	DRAWING
E	EAST OR ELECTRIC OR EDGE
EJ	EXPANSION JOINT
ELEV	ELEVATION
E/P	EDGE OF PAVEMENT
EX	EXISTING
F & CL	FRAME & CLOSED LID
F & G	FRAME & GRATE
F & OL	FRAME & OPEN LID
FES	FLARED END SECTION
F-F	FACE TO FACE OF CURB
FF	FINISHED FLOOR
F/G	FINISHED GRADE
FH	FIRE HYDRANT
F/L	FLOW LINE
G	GAS LINE
GV/VB	GATE VALVE IN VALVE BOX
GV/VV	GATE VALVE IN VALVE VAULT
HDCP	HANDICAP
HDPE	HIGH DENSITY POLYETHYLENE PIPE
HDW	HEADWALL
HOR	HORIZONTAL
HP	HIGH POINT
HWL	HIGH WATER LEVEL
IE	INVERT ELEVATION
IN	INLET
LF	LINEAL FEET
LP	LOW POINT OR LIGHT POLE
L	LEFT
ME	MATCH EXISTING
MH	MANHOLE
MW	MONITORING WELL
N	NORTH
NIC	NOT IN CONTRACT / NOT INCLUDED
NWL	NORMAL WATER LEVEL
OC	ON CENTER
OL	OPEN LID
PC	POINT OF CURVATURE
PCC	PORTLAND CEMENT CONCRETE OR POINT OF COMPOUND CURVE
PGL	PROFILE GRADE LINE
PI	POINT OF INTERSECTION
PL	PROPERTY LINE
PR	PROPOSED
PP	POWER POLE
PRC	POINT OF REVERSE CURVATURE
PT	POINT OF TANGENCY
PUE	PUBLIC UTILITY EASEMENT
PVC	POINT OF VERTICAL CURVATURE OR POLYVINYL CHLORIDE PIPE
PVI	POINT OF VERTICAL INTERSECTION
PVT	POINT OF VERTICAL TANGENCY
R	RADIUS OR RIGHT
RCP	REINFORCED CONCRETE PIPE
ROW	RIGHT OF WAY
S	SLOPE OR SOUTH
SAN	SANITARY
SF	SILTATION FENCE
SFM	SANITARY FORCE MAIN
SHT	SHEET
SHW	SUBMERGED HEADWALL
SMH	SANITARY MANHOLE
STA	STATION
ST	STORM STRUCTURE OR STORM SEWER
STMH	STORM MANHOLE
T	TANGENT LENGTH OR TELEPHONE
T/C	TOP OF CURB
T/P	TOP OF PIPE
T/S	TOP OF SIDEWALK
T/W	TOP OF WALL
TY	TYPE
TYP	TYPICAL
UP	UTILITY POLE
VC	VERTICAL CURVE
VERT	VERTICAL
VCP	VITRIFIED CLAY PIPE
W	WEST
WM	WATER MAIN

BENCHMARK

SOURCE:
BM ESTABLISHED VIA TRIMBLE VRS NETWORK.
IL EAST GEOD 09, GSF 1.0000527978

SITE:

STATION DESIGNATION: SBM #1
ESTABLISHED BY: V3 COMPANIES DATE: 10-23-2012
ELEVATION: 693.92 (MEASURED) DATUM: NAVD88
DESCRIPTION:
NORTHWEST FLANGE BOLT ON FIRE HYDRANT ON SOUTH SIDE OF MAIN STREET, NORTH OF HARRIS BANK.

STATION DESIGNATION: SBM #2
ESTABLISHED BY: V3 COMPANIES DATE: 10-23-2012
ELEVATION: 690.87 (MEASURED) DATUM: NAVD88
DESCRIPTION:
WEST SIDE OF CONCRETE BASE OF LIGHT STANDARD ON WEST SIDE RIVERSIDE AVENUE, 46'± SOUTHERLY FROM SOUTHEAST CORNER OF HARRIS BANK BUILDING.

INDEX OF DRAWINGS

C1.0 GENERAL NOTES, LEGEND AND ABBREVIATIONS
C2.0 DEMOLITION PLAN
C3.0 LAYOUT PLAN
C4.0 GRADING PLAN
C5.0 CONSTRUCTION DETAILS

WHITNEY
ARCHITECTS, INC.
700 Commerce Drive | Suite 350
Oak Brook, IL 60523 | USA
T : 630.571.1118 | F : 630.571.0518
whitney-architects.com
IL CORPORATE LIC. 184-001580

V3 COMPANIES
7325 Janes Avenue
Woodridge, IL 60517
T: 630.724.9200
F: 630.724.9202
www.v3co.com

JONES LANG LASALLE

BMO Harris Bank

BMO HARRIS H0126
1 E. MAIN STREET
ST. CHARLES, IL 60174

REV.	DESCRIPTION	DATE
	ISSUED FOR RAMP SUBMITTAL	06-03-13
	ISSUED FOR PERMIT / CONSTRUCTION	02-07-13
	ISSUED FOR CONSTRUCTION	1-26-12
	ISSUED FOR REVIEW	11-20-12

ISSUES

PHASE:
SCOPE DOCUMENTS PHASE

SHEET DESCRIPTION:
GENERAL NOTES, LEGEND AND ABBREVIATIONS

FLOOR NO.:

Scale: N.T.S.
Job Number: V3:12139.11 JLL#H0126
North:
Drawn: NRS
Chk'd: MBI
C1.0

© 2012 WHITNEY ARCHITECTS
Plot Date: 11-20-12
Project Location:

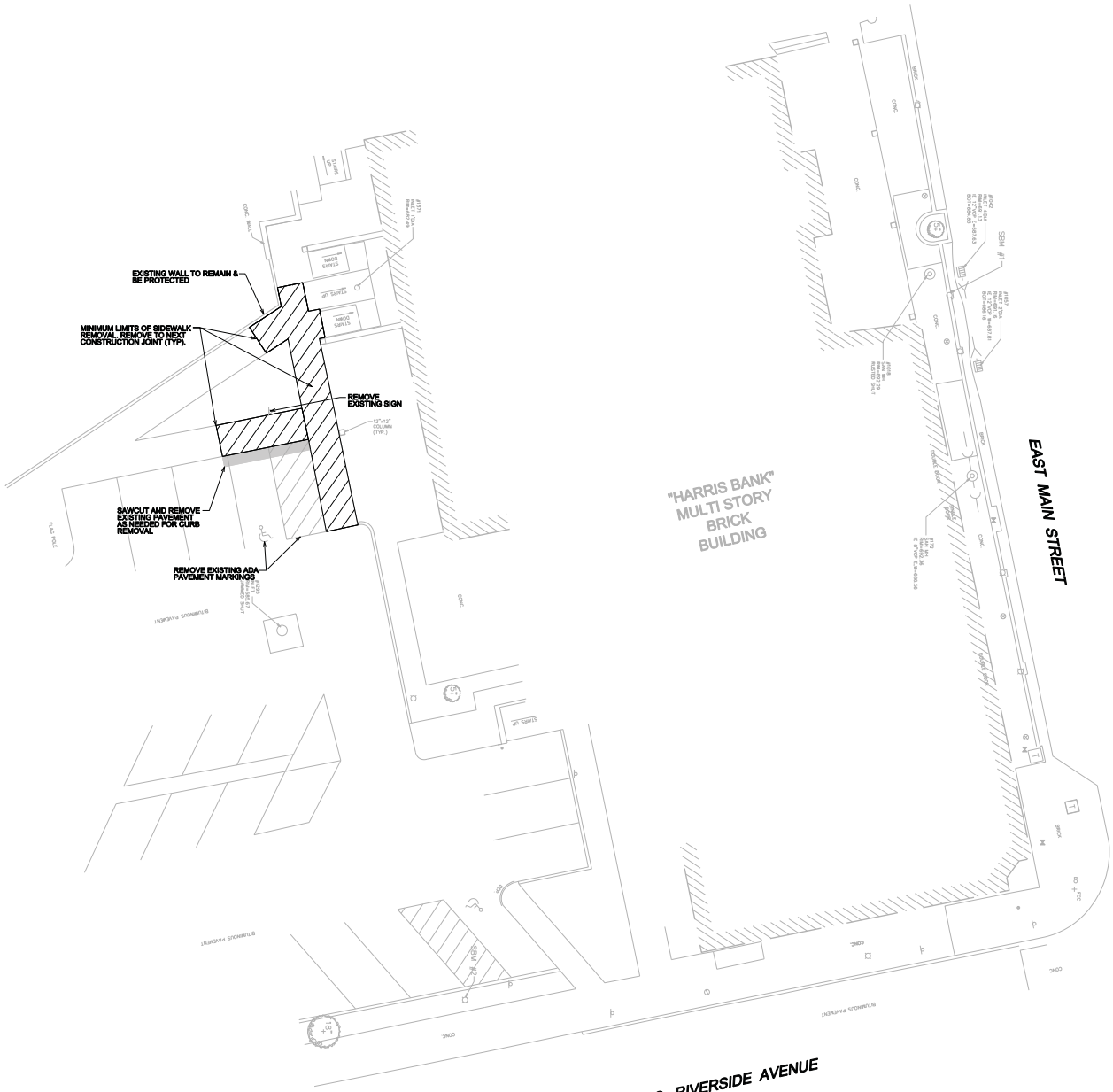

LEGEND

	EXISTING BITUMINOUS PAVEMENT TO BE REMOVED AND PROPERLY DISPOSED OF
	EXISTING STAIRS TO BE REMOVED AND PROPERLY DISPOSED OF
	EXISTING SIDEWALK TO BE REMOVED AND PROPERLY DISPOSED OF
XXXXXXXXXX	EXISTING ITEM TO BE REMOVED AND PROPERLY DISPOSED OF
X	MISCELLANEOUS ITEM TO BE REMOVED AND PROPERLY DISPOSED OF

1. DEMOLITION

THE EXTENT OF SITE DEMOLITION WORK IS AS SHOWN ON THE CONTRACT DOCUMENTS AND AS SPECIFIED HEREIN. FURNISH ALL LABOR, MATERIALS, EQUIPMENT AND SERVICE NECESSARY TO COMPLETE THE WORK. DEMOLITION INCLUDES, BUT IS NOT LIMITED TO, REMOVAL AND DISPOSAL OFFSITE OF THE FOLLOWING ITEMS:

- SIDEWALK AND ON-SITE PAVEMENT
- ALL PAVEMENT TO BE REMOVED ADJACENT TO PAVEMENT THAT IS TO REMAIN SHALL BE SAWCUT FULL DEPTH AT THE EDGES PRIOR TO REMOVAL TO OBTAIN A "CLEAN" JOINT WHERE IT ABUTS NEW CURB OR PAVEMENT.

CONTRACTOR MUST RECEIVE APPROVAL FROM CIVIL OR GEOTECHNICAL ENGINEER FOR THE MATERIAL TYPE AND USE IF CONTRACTOR DESIRES TO REUSE DEMOLISHED SITE PAVEMENT AS STRUCTURAL FILL.

2. JOB CONDITIONS

CONDUCT DEMOLITION OPERATIONS AND REMOVAL OF DEBRIS TO ENSURE MINIMUM INTERFERENCE WITH ROADS, STREETS, WALKS AND OTHER ADJACENT OCCUPIED OR USED FACILITIES. THE CONTRACTOR SHALL PROVIDE MAINTENANCE OF TRAFFIC TO PROVIDE SAFE PASSAGE FOR VEHICULAR AND PEDESTRIAN TRAFFIC. THIS INCLUDES APPROPRIATE SIGNAGE FOR CLOSING THE PUBLIC SIDEWALK, ROADWAY AND NECESSARY PARKING SPACES. ALL MAINTENANCE OF TRAFFIC SHALL BE APPROVED BY ALL AUTHORITIES HAVING JURISDICTION INCLUDING, BUT NOT LIMITED TO THE MUNICIPALITY, COUNTY, AND IDOT; WHERE CONFLICTING REQUIREMENTS EXIST, THE MORE STRINGENT REQUIREMENT SHALL GOVERN. THE CONTRACTOR SHALL BE RESPONSIBLE FOR PROTECTION OF THE ADJACENT BUILDINGS, PAVEMENTS AND UTILITIES TO REMAIN FROM ANY DAMAGE AND SHALL BE RESPONSIBLE FOR REPAIRING THE SAME.

UNDERGROUND UTILITIES SHOWN ARE BASED ON ATLASES AND AVAILABLE INFORMATION PRESENTED AT THE TIME OF SURVEY. CONTRACTOR SHOULD CALL "JULIE"(1-800-892-0123) TO COORDINATE FIELD LOCATIONS OF EXISTING UNDERGROUND UTILITIES IF NECESSARY. CONTRACTOR SHALL LOCATE AND PROTECT EXISTING UNDERGROUND AND OVERHEAD UTILITIES DURING CONSTRUCTION. UTILITY PROTECTION SHALL BE COORDINATED WITH THE RESPECTIVE UTILITY OWNER AND AS DIRECTED BY THE GOVERNING MUNICIPALITY. DAMAGED CABLES/CONDUITS SHALL BE REPLACED IMMEDIATELY. ALL EXISTING STRUCTURES TO REMAIN SHALL BE PROTECTED THROUGHOUT THE CONSTRUCTION PROCESS. ALL DAMAGED STRUCTURES SHALL BE REPLACED IN-KIND AND THEIR REPLACEMENT COST SHALL BE CONSIDERED INCIDENTAL TO THE CONTRACT. PROPER NOTIFICATION TO THE OWNERS OF THE EXISTING UTILITIES SHALL BE MADE AT LEAST 48 HOURS BEFORE CONSTRUCTION COMMENCES.

USE WATER SPRINKLING, TEMPORARY ENCLOSURES, AND OTHER SUITABLE METHODS TO LIMIT DUST AND DIRT RISING AND SCATTERING IN THE AIR TO THE LOWEST LEVEL. COMPLY WITH ALL GOVERNING REGULATIONS PERTAINING TO ENVIRONMENTAL PROTECTION.

REMOVE FROM SITE DEBRIS, RUBBISH AND OTHER MATERIALS RESULTING FROM DEMOLITION OPERATIONS. BURNING OF REMOVED MATERIALS FROM DEMOLISHED STRUCTURES WILL NOT BE PERMITTED ON SITE. TRANSPORT MATERIALS REMOVED FROM DEMOLISHED STRUCTURES AND DISPOSE OF OFF SITE IN A LEGAL MANNER.

CONTRACTOR TO PROTECT EXISTING LANDSCAPING DURING CONSTRUCTION. REMOVE AND REPLACE TO ORIGINAL CONDITIONS OR BETTER IF DISTURBED OR DAMAGED.

1"=10' 10 0 10 20
SCALE FEET

WHITNEY
ARCHITECTS, INC.
700 Commerce Drive | Suite 350
Oak Brook, IL 60523 | USA
T : 630.571.1118 | F : 630.571.0518
whitney-architects.com
IL CORPORATE LIC. 184-001690

V3 COMPANIES
7325 Jones Avenue
Woodridge, IL 60517
T: 630.724.9200
F: 630.724.9202
www.v3co.com

JONES LANG LASALLE

BMO Harris Bank

BMO HARRIS H0126
1 E. MAIN STREET
ST. CHARLES, IL 60174

REV.	DESCRIPTION	DATE
	ISSUED FOR RAMP SUBMITAL	04-09-13
	ISSUED FOR PERMIT / CONSTRUCTION	02-07-13
	ISSUED FOR CONSTRUCTION	11-26-12
	ISSUED FOR REVIEW	11-20-12

ISSUES

PHASE:
SCOPE DOCUMENTS PHASE

SHEET DESCRIPTION:
DEMOLITION PLAN

FLOOR NO.:

Scale: 1" = 10'
Job Number: V3:12139.11 JULIHN0126
North:
Drawn: HRS
CHKD: MBI
C2.0

© 2012 WHITNEY ARCHITECTS
Issue Date: 11-20-12
Project Location:

NOTES:

1. ALL DIMENSIONS SHOWN ARE TO BACK OF CURB UNLESS OTHERWISE NOTED.
2. ALL PROPOSED ON-SITE STRIPING SHALL BE PAINTED YELLOW UNLESS OTHERWISE NOTED.

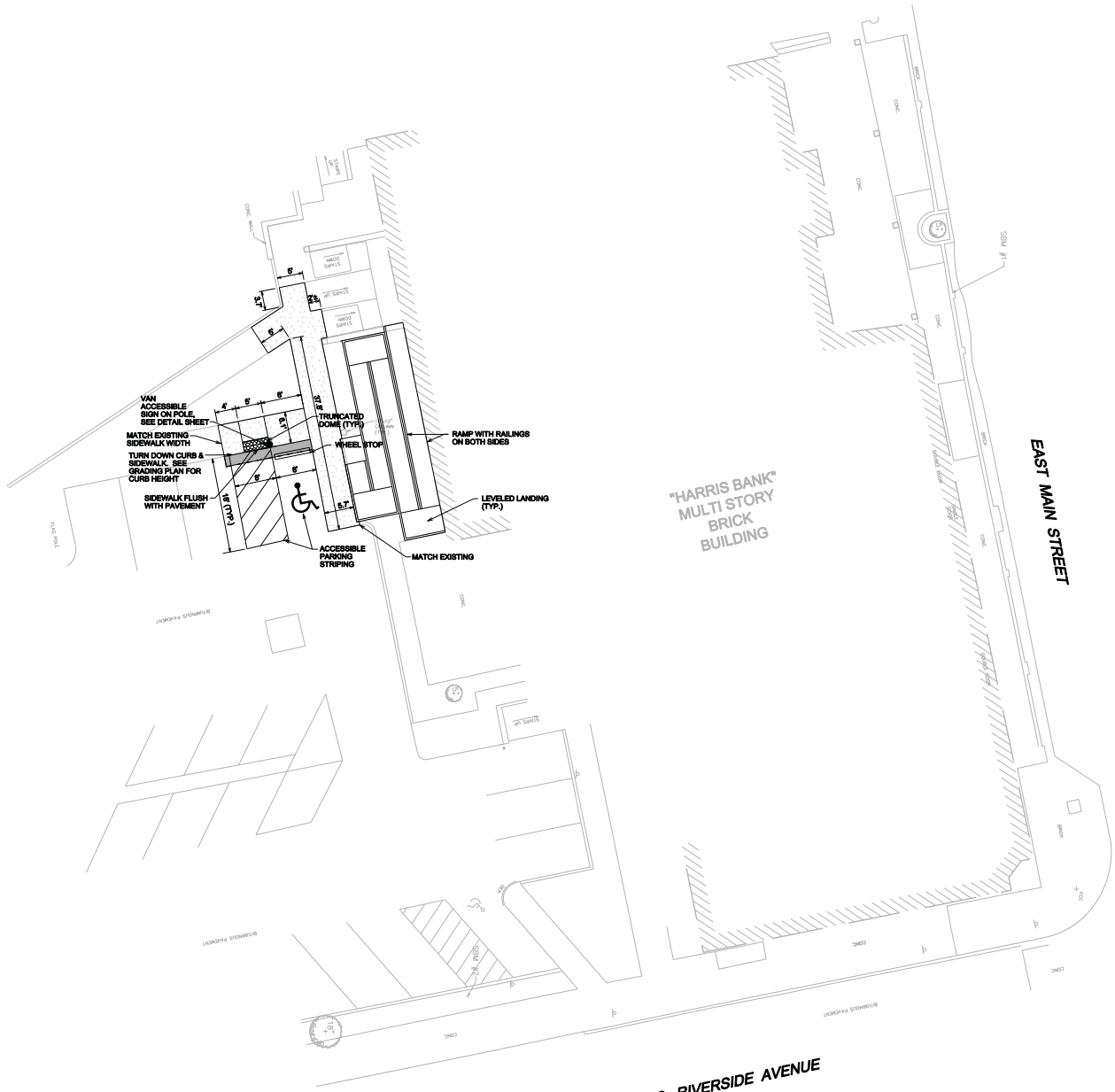

PAVING LEGEND

REGULAR BITUMINOUS PAVEMENT

HOT MIX ASPHALT (MATCH EXISTING)
AGGREGATE BASE COURSE - CA6 (MATCH EXISTING)

CONCRETE SIDEWALK

5" P.C. CONCRETE
4" AGGREGATE BASE COURSE - CA6

1"=10' 10 0 10 20 SCALE FEET

WHITNEY
ARCHITECTS, INC.
700 Commerce Drive | Suite 350
Oak Brook, IL 60523 | USA
T : 630.571.1118 | F : 630.571.0518
whitney-architects.com
IL CORPORATE LIC. 184-001580

V3 COMPANIES
7325 Jones Avenue
Woodridge, IL 60517
T: 630.724.9200
F: 630.724.9202
www.v3co.com

JONES LANG LASALLE

BMO Harris Bank

BMO HARRIS H0126
1 E. MAIN STREET
ST. CHARLES, IL 60174

REV.	DESCRIPTION	DATE
	ISSUED FOR RAMP SUBMITTAL	06-03-13
	ISSUED FOR PERMIT / CONSTRUCTION	02-07-13
	ISSUED FOR CONSTRUCTION	11-26-12
	ISSUED FOR REVIEW	11-20-12

ISSUES

PHASE:
SCOPE DOCUMENTS PHASE

SHEET DESCRIPTION:
LAYOUT PLAN

FLOOR NO.:

Scale: 1" = 10'
Job Number: V3:12139.11 JLL#H0126
North:
Drawn: HRS
Chk'd: MIN

C3.0

© 2012 WHITNEY ARCHITECTS
Plot Date: 11-20-12
Project Location:

C3.0 Lay12139.11.dgn 6/3/2013 12:03:21 PM

NOTES:

1. ALL PAVEMENT SPOT GRADE ELEVATIONS AND RIM ELEVATIONS WITHIN OR ALONG CURB AND GUTTER REFER TO EDGE OF PAVEMENT ELEVATIONS UNLESS OTHERWISE NOTED.
2. ALL ELEVATIONS SHOWN DEPICT FINISHED GRADE UNLESS OTHERWISE NOTED. SUBTRACT TOPSOIL THICKNESS OR PAVEMENT SECTION TO ESTABLISH SUBGRADE ELEVATIONS.
3. PROVIDE 2.00% MAX (1.00% MIN) CONSTRUCTED CROSS SLOPE AND 5.00% MAX LONGITUDINAL CONSTRUCTED SLOPE ON ALL SIDEWALKS TO COMPLY WITH THE ILLINOIS ACCESSIBILITY CODE.
4. TEMPORARY EROSION CONTROL TO BE INSTALLED PRIOR TO DEMOLITION ACTIVITIES AND SHOULD BE REMOVED AT THE END OF CONSTRUCTION.
5. E/S = EDGE OF SIDEWALK

1"=10' 10 0 10 20 SCALE FEET

WHITNEY
ARCHITECTS, INC.
700 Commerce Drive | Suite 350
Oak Brook, IL 60523 | USA
T : 630.571.1118 | F : 630.571.0518
whitney-architects.com
IL CORPORATE LIC. 184-001680

V3 COMPANIES
7325 Jones Avenue
Woodridge, IL 60517
T: 630.724.9200
F: 630.724.9202
www.v3co.com

JONES LANG LASALLE

BMO Harris Bank

BMO HARRIS H0126
1 E. MAIN STREET
ST. CHARLES, IL 60174

REV.	DESCRIPTION	DATE
	ISSUED FOR RAMP SUBMITTAL	06-03-13
	ISSUED FOR PERMIT / CONSTRUCTION	02-07-13
	ISSUED FOR CONSTRUCTION	11-26-12
	ISSUED FOR REVIEW	11-20-12

ISSUES

PHASE:
SCOPE DOCUMENTS PHASE

SHEET DESCRIPTION:
GRADING PLAN

FLOOR NO.:

Scale: 1" = 10'
Job Number: V3:12139.11 JLL#H0126
North:
Drawn: NRS
Ch'd: MIN
C4.0

© 2012 WHITNEY ARCHITECTS
Plot Date: 11-20-12
Project Location:

C4.0 Grd12139.11.dgn 6/3/2013 12:01:05 PM

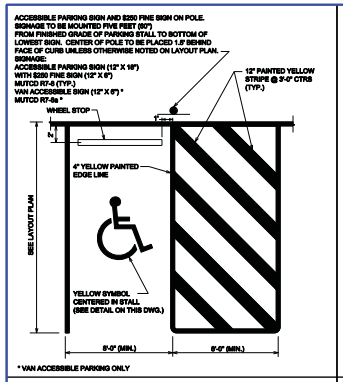

ACCESSIBLE PARKING STALL DETAIL

ACCESSIBLE PARKING SIGNS

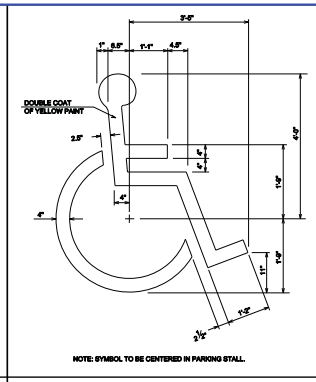

PAINTED ACCESSIBLE STALL SYMBOL

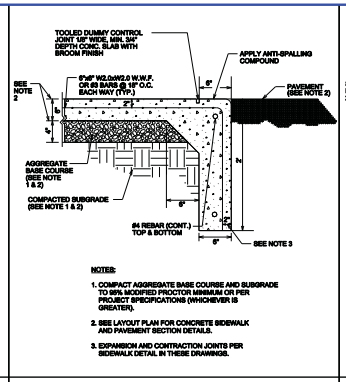

FLUSH CURB AND SIDEWALK

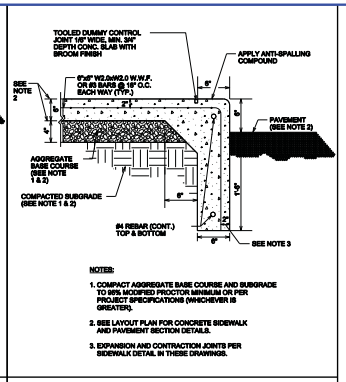

TURN - DOWN CURB AND SIDEWALK

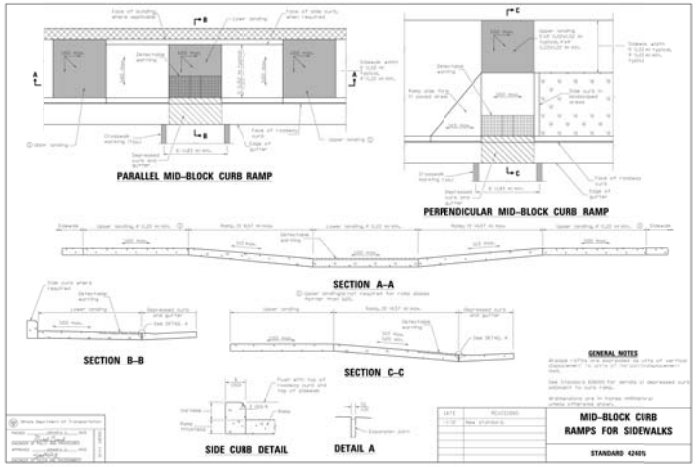

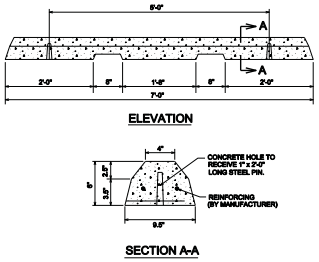

CONCRETE WHEEL STOP

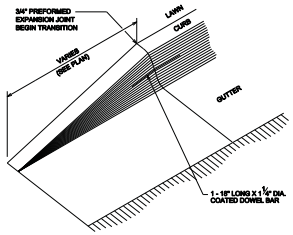

CURB TERMINATION

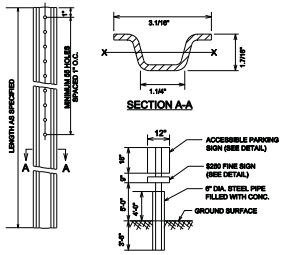

SIGN POST DETAIL

WHITNEY
ARCHITECTS, INC.
700 Commerce Drive | Suite 350
Oak Brook, IL 60523 | USA
T : 630.571.1118 | F : 630.571.0518
whitney-architects.com
IL CORPORATE LIC. 184-001690

V3 COMPANIES
7325 Jones Avenue
Woodridge, IL 60517
T: 630.724.9200
F: 630.724.9202
www.v3co.com

JONES LANG LASALLE

BMO Harris Bank

BMO HARRIS H0126
1 E. MAIN STREET
ST. CHARLES, IL 60174

REV.	DESCRIPTION	DATE
	ISSUED FOR BANK SUBMITTAL	04-03-13
	ISSUED FOR PERMIT / CONSTRUCTION	02-07-13
	ISSUED FOR CONSTRUCTION	11-26-12
	ISSUED FOR REVIEW	11-20-12

ISSUES

PHASE:
SCOPE DOCUMENTS PHASE

SHEET DESCRIPTION:
CONSTRUCTION DETAILS

FLOOR NO.:

Scale: N.T.S.
Job Number: V3:12139.11 JLL#H0126
North:
Drawn: MBS
CH'KD: MBI

C5.0

© 2012 WHITNEY ARCHITECTS
Issue Date: 11-20-12
Project Location:

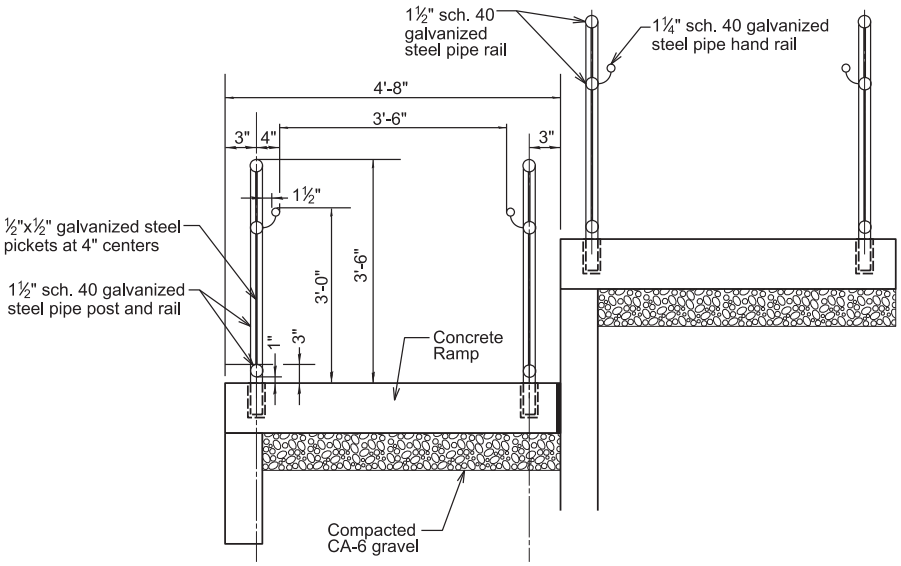

SECTION B-B

NOTES:

1. FOR INFORMATION ONLY. RAILING, RAMP AND REINFORCING DESIGN DETAILS ARE TO BE SHOWN ON STRUCTURAL PLANS.

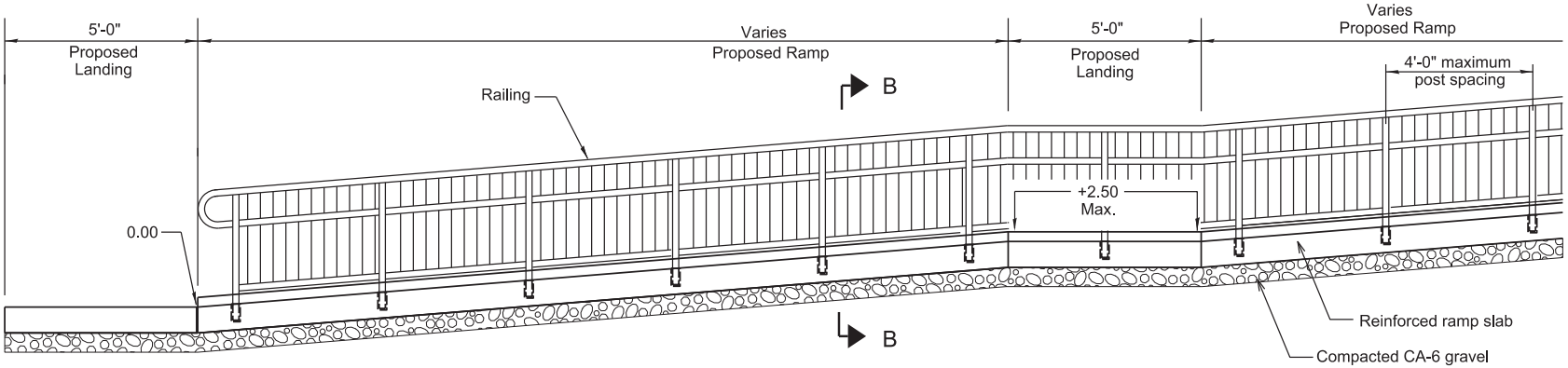

SECTION

DATE: 06-12-13

V3 Companies
7325 Janes Avenue
Woodridge, IL 60517
630.724.9200 phone
630.724.9202 fax
www.v3co.com

Visio, Vertere, Virtute... "The Vision to Transform with Excellence"

BMO Harris Bank

ST. CHARLES 1 N. MAIN STREET (H0126) ILLINOIS

RAMP RAILING EXHIBIT

SCALE : N.T.S.

E:\2012\12139\12139.11\Drawings\Mstn\Exhibit\EXHB Ramp Railing 12139.11.dgn 6/13/2013 9:32:01 AM