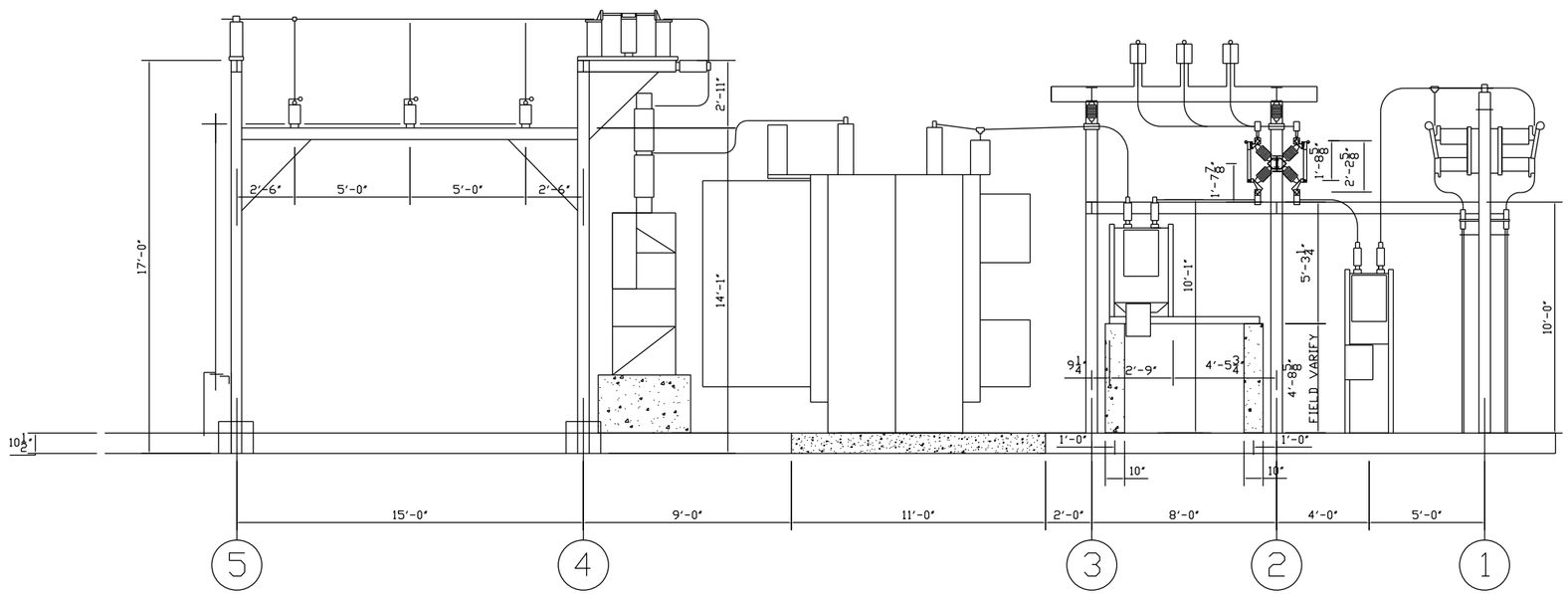

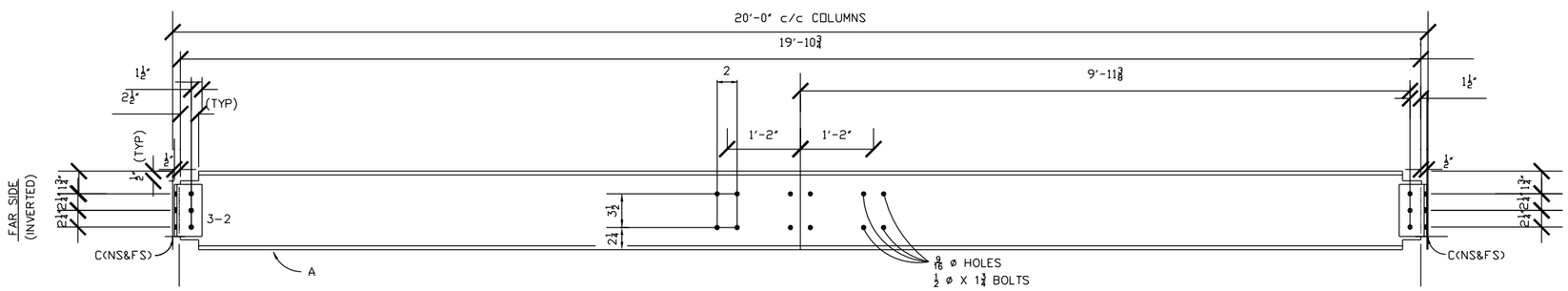

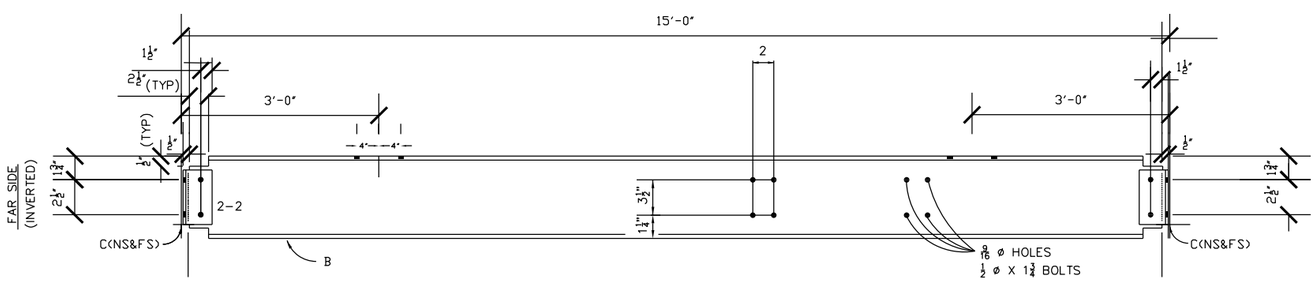

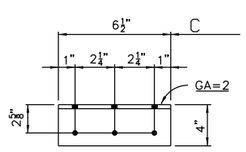

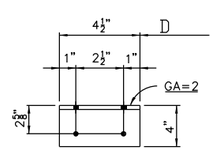

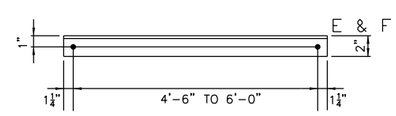

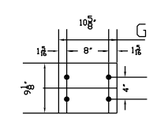

MARK	QTY.	DESCRIPTION	LENGTH FT.	LENGTH INS.	REMARKS
A	2	W 8x5.9	19	10 3/4	(BLOCK)
B	6	W 6x5.4	14	10 3/4	(BLOCK)
C	8	L 4X3X1/4	0	6 1/2	
D	12	L 4X3X1/4	0	4 1/2	
E	12	L 2X2X1/4	4	6	
F	4	L 2X2X1/4	6	0	
G	24	JVT-200 BASE PL	0	4 1/2	
	27	5/8øX1 3/4 BOLTS			
	27	1/2øX1 1/2 BOLTS			
	54	5/8ø BEVEL WASHERS			
	54	1/2ø BEVEL WASHERS			
		PT'S NUTS & BOLTS?			
		P			

REVISIONS

ISSUE NO.	DESCRIPTION	DATE

SUBSTATION No. 3
NEW RECLOSER

CITY OF ST. CHARLES
ELECTRIC
DEPARTMENT
ESTABLISHED IN 1892

PROJECT ENGINEER:	NP
DATE:	4/13/07
SCALE:	1/4"=1'
DRAWN BY: NRP	DRAWING NO.: C-01
SHEET 1	OF 1

PLOT DATE: 06/01/07

FILE NAME: Section C-C.dwg