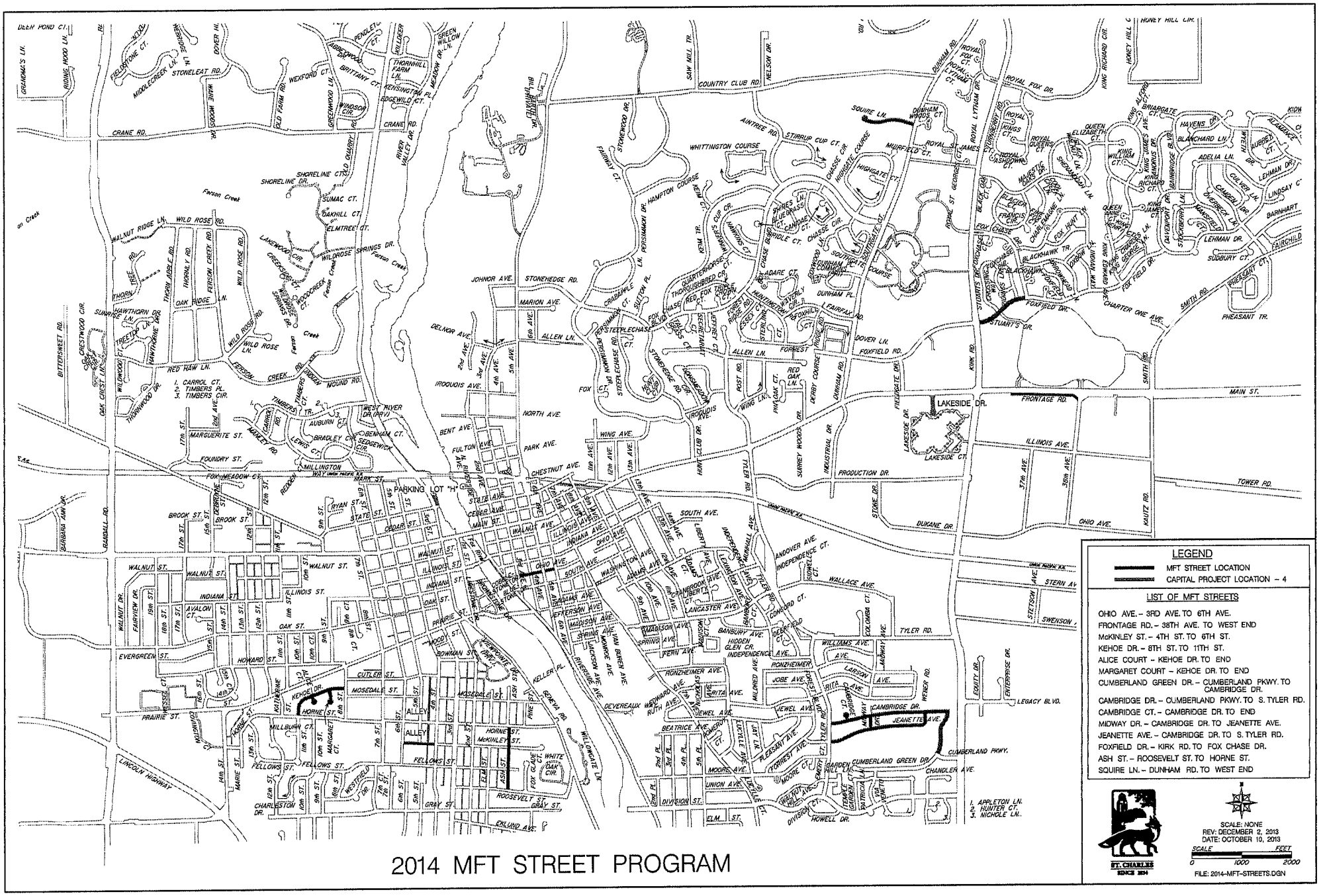

2014 MFT STREET PROGRAM

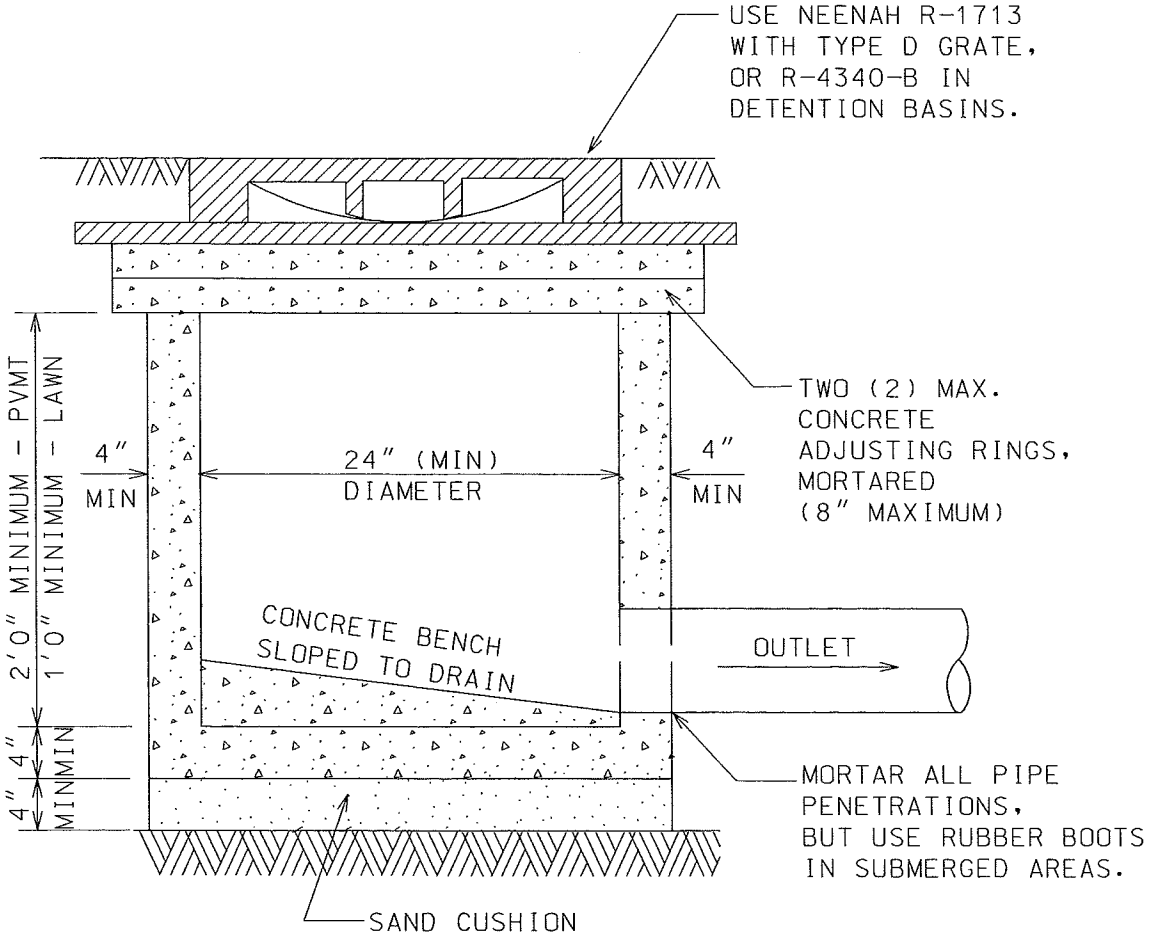

NOTE:

1. INLET TO BE CONSTRUCTED OF PRECAST REINFORCED CONCRETE.

2. INLET MUST CONFORM TO ASTM C-478.

3. NON-PRECAST OPENINGS SHALL BE CORED AND RUBBER BOOTED.

4. MAXIMUM DEPTH FROM INVERT OF OUTLET PIPE TO TOP OF FRAME SHALL NOT EXCEED 42 INCHES. IF DESIGN OR CONSTRUCTION REQUIRES DEPTH BEYOND 42 INCHES, STRUCTURE SHALL BE REVISED TO A 48 INCH DIAMETER TY A MANHOLE.

NOT TO SCALE

DATE: 3-31-09

TYPE A INLET DETAIL

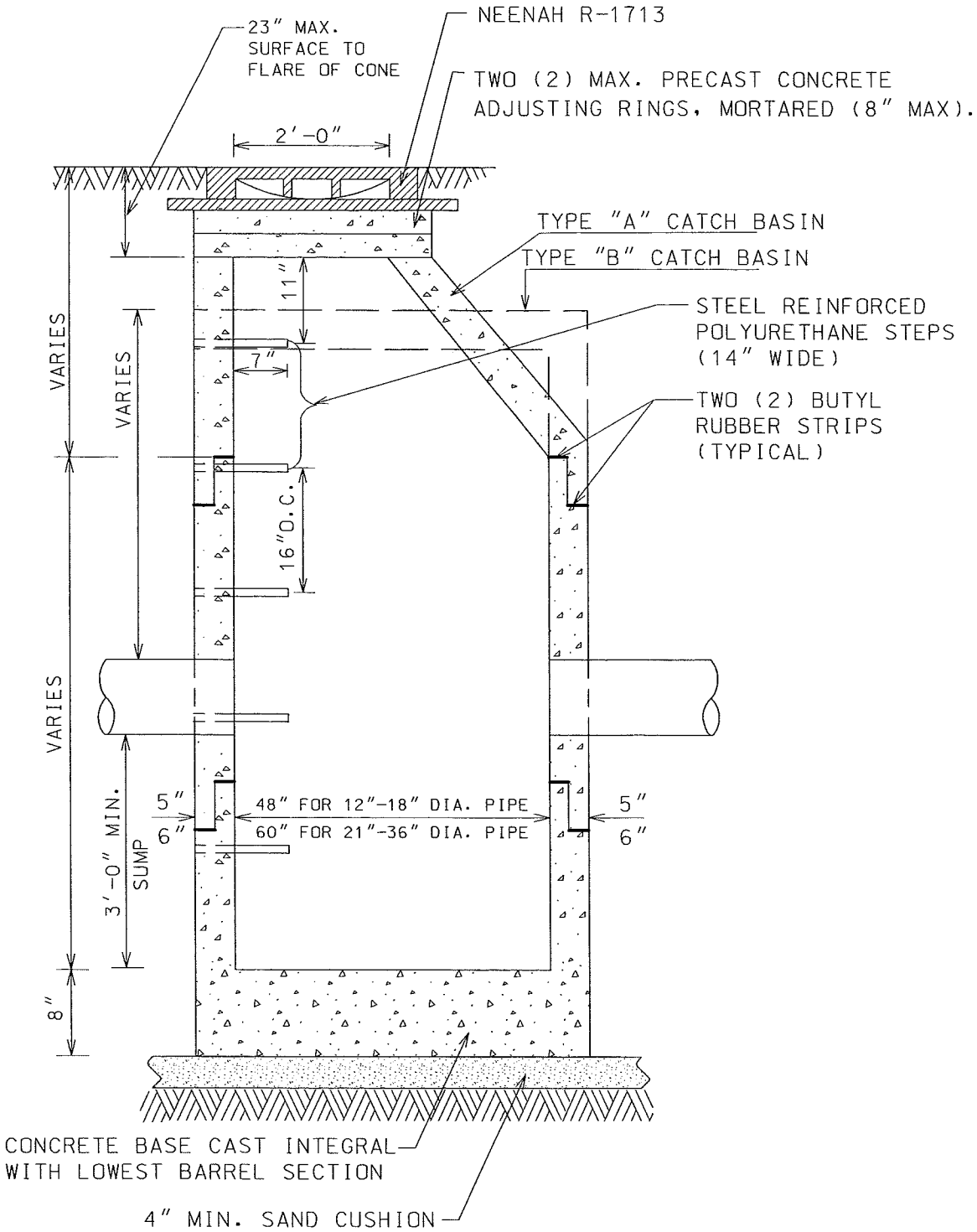

NOTES:

1. MANHOLES MUST CONFORM TO ASTM C-478.
2. MANHOLE SECTIONS TO BE TONGUE AND GROOVED.
3. NON-PRECAST OPENINGS SHALL BE CORED AND RUBBER BOOTED.
4. MORTAR ALL PENETRATIONS INSIDE AND OUTSIDE OF STRUCTURE.
5. IN "SUBMERGED" CONDITIONS, ALL PIPE PENETRATIONS TO BE CORED, RUBBER BOOTED AND INTERIOR MORTARED.
6. PRIOR TO THE PLACEMENT OF FINAL LAYER OF ROADWAY, FRAMES AND ADJUSTING RINGS LOCATED WITHIN PAVED AREAS SHALL BE SET IN AN IDOT APPROVED CONCRETE "SI" MIXTURE.

NOT TO SCALE

DATE: 7-27-10

TYPE A & B CATCH BASIN DETAIL

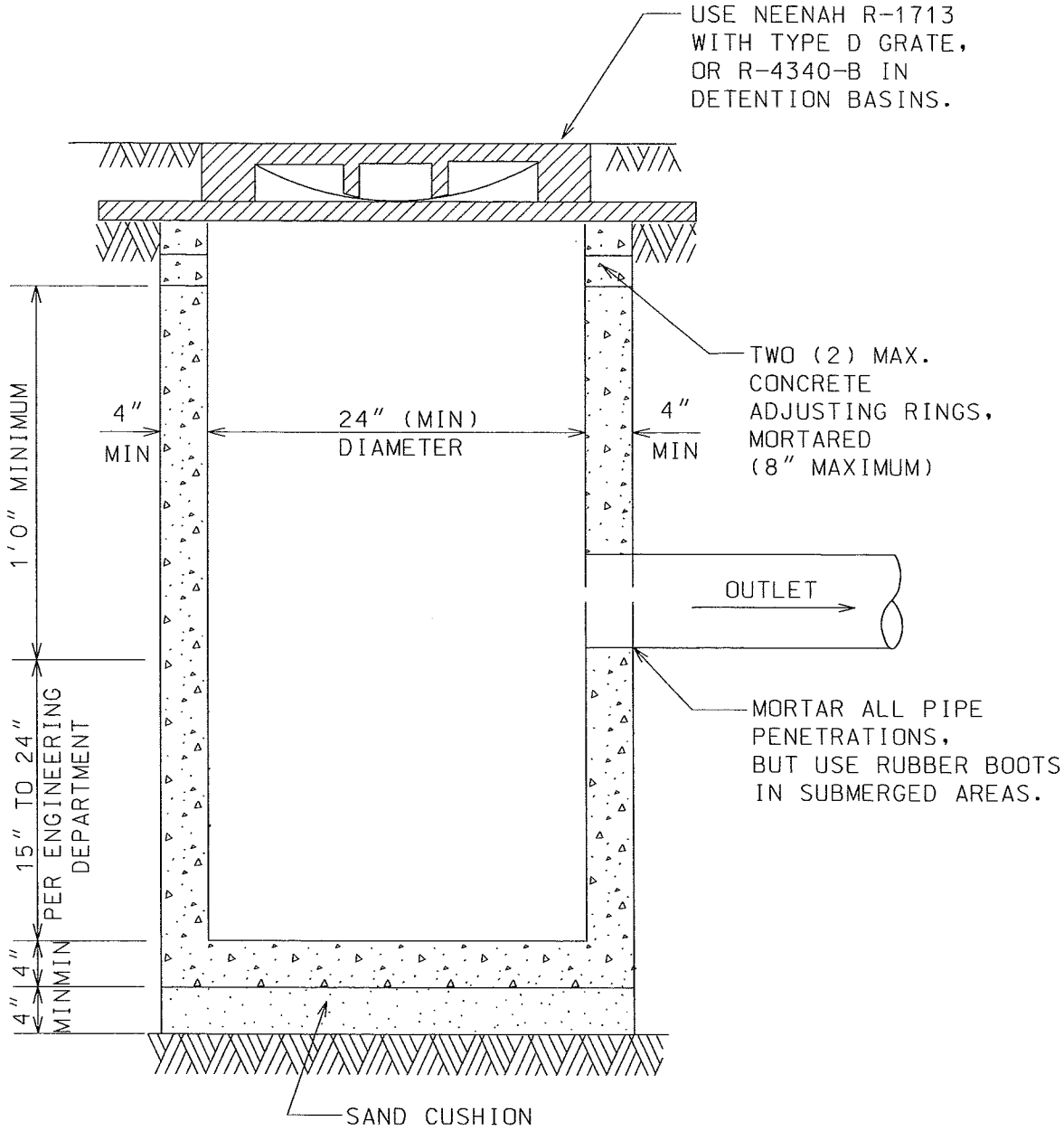

NOTE:

1. CATCH BASIN TO BE CONSTRUCTED OF PRECAST REINFORCED CONCRETE.
2. CATCH BASIN MUST CONFORM TO ASTM C-478.
3. NON-PRECAST OPENINGS SHALL BE CORED AND RUBBER BOOTED.
4. MAXIMUM DEPTH FROM INVERT OF OUTLET PIPE TO TOP OF FRAME SHALL NOT EXCEED 42 INCHES. IF DESIGN OR CONSTRUCTION REQUIRES DEPTH BEYOND 42 INCHES, STRUCTURE SHALL BE REVISED TO A 48 INCH DIAMETER TY A CATCH BASIN.

NOT TO SCALE

TYPE C CATCH BASIN DETAIL

DATE: 8-18-10

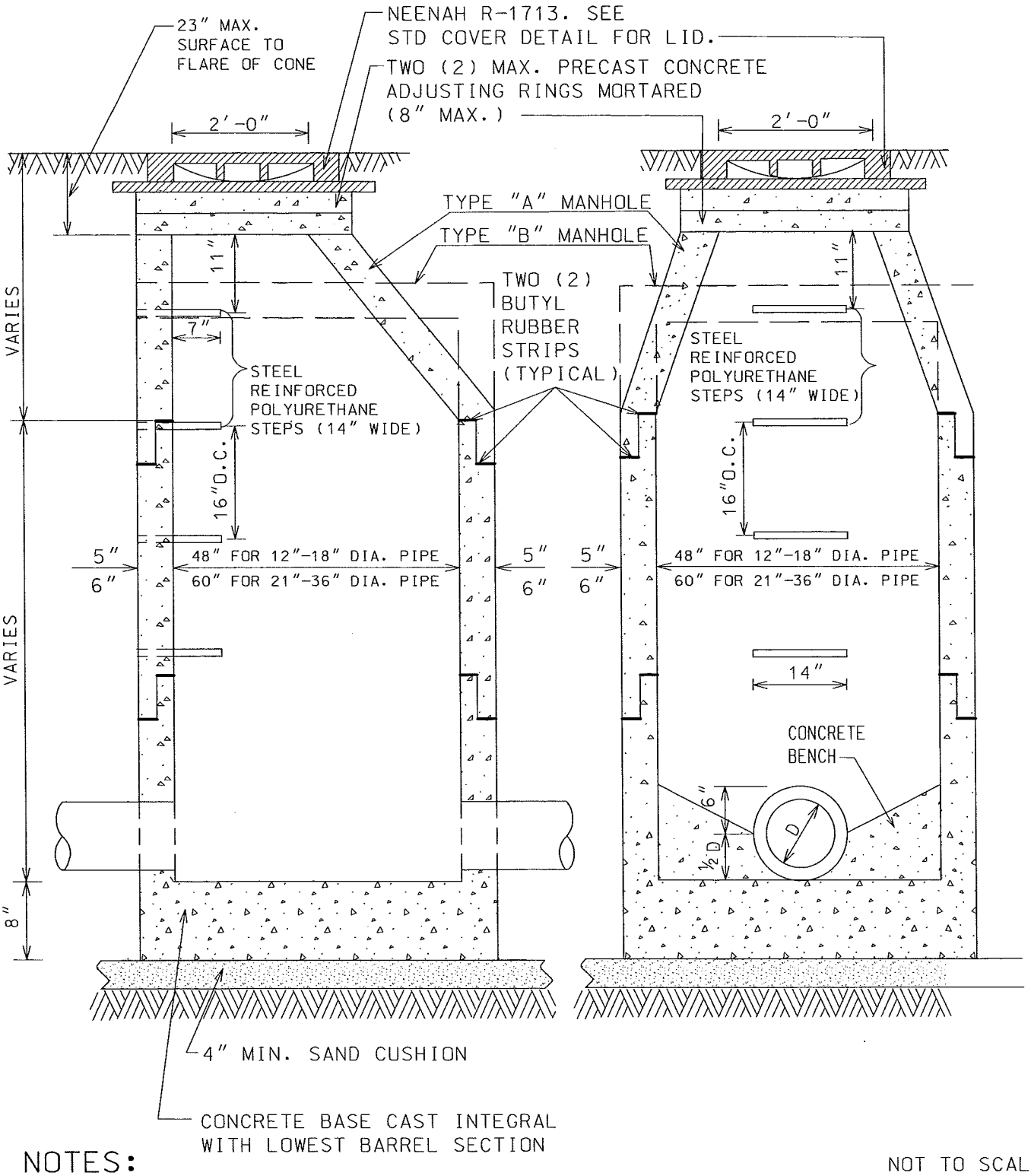

NOTES:

1. MANHOLES MUST CONFORM TO ASTM C-478.
2. MANHOLE SECTIONS TO BE TONGUE AND GROOVED.
3. BENCHES MUST BE PROVIDED IN ALL STORM SEWER MANHOLES.
4. NON-PRECAST OPENINGS SHALL BE CORED AND RUBBER BOOTED.
5. MORTAR ALL PIPE PENETRATIONS INSIDE AND OUTSIDE OF STRUCTURE.
6. IN "SUBMERGED" CONDITIONS, ALL PIPE PENETRATIONS TO BE CORED, RUBBER BOOTED AND INTERIOR MORTARED.
7. PRIOR TO THE PLACEMENT OF FINAL LAYER OF ROADWAY, FRAMES AND ADJUSTING RINGS LOCATED WITHIN PAVED AREAS SHALL BE SET IN AN IDOT APPROVED CONCRETE "SI" MIXTURE.

NOT TO SCALE

DATE: 7-27-10

TYPE A & B STORM MANHOLE DETAIL

4″ PIPE UNDERDRAIN PLAN

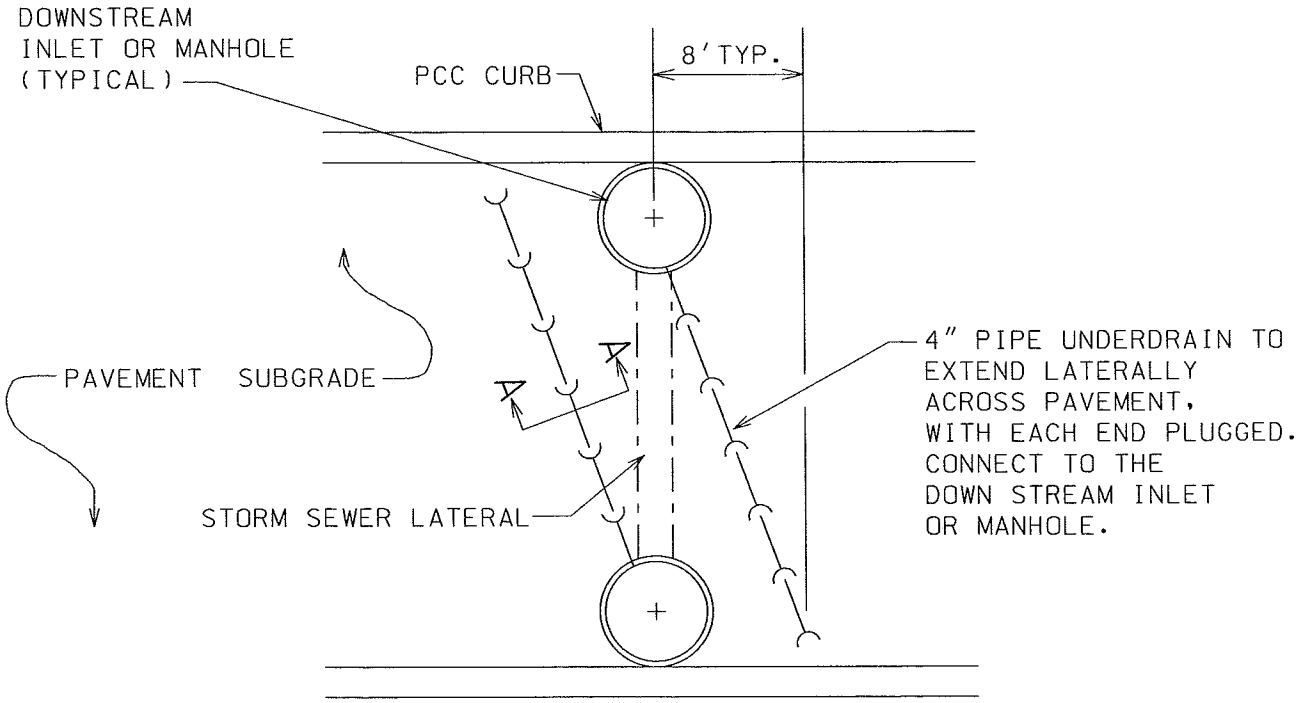

SECTION A–A

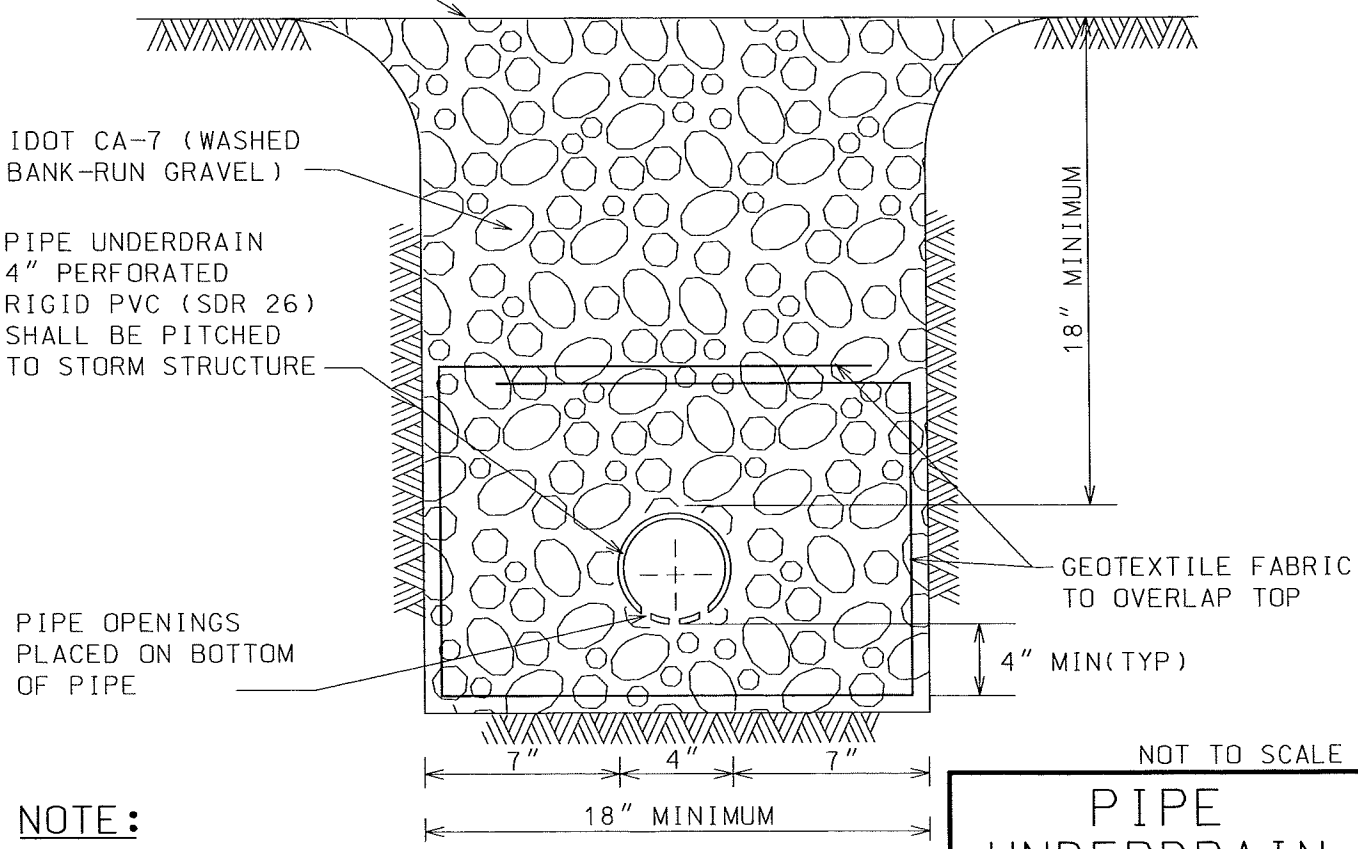

NOT TO SCALE

NOTE:

UNDERDRAIN TO BE INSTALLED BELOW ALL NEW ROADWAYS

DATE: 1-20-11

PIPE UNDERDRAIN DETAIL

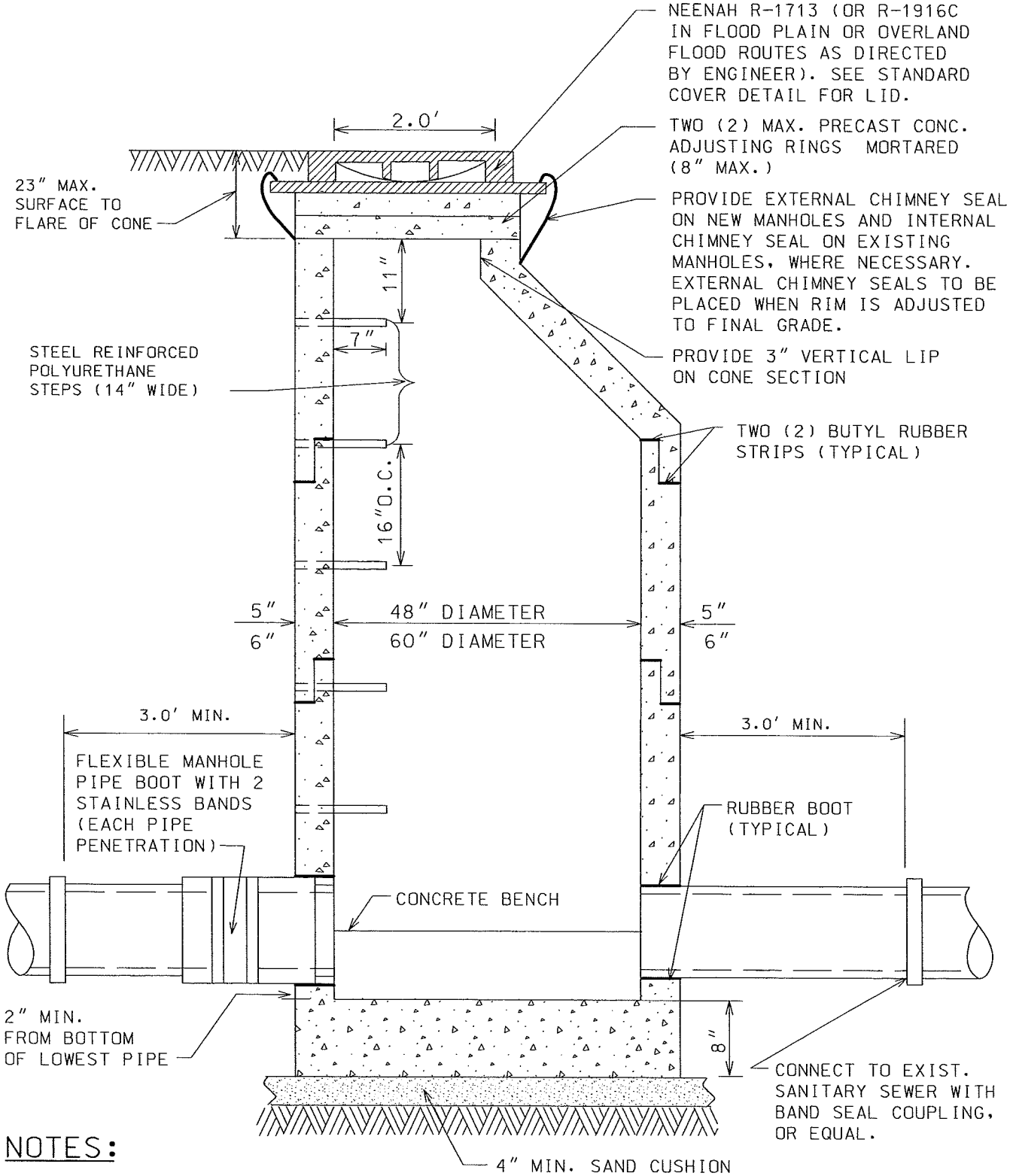

NOTES:

1. MANHOLES MUST CONFORM TO ASTM C-478.
2. MANHOLE SECTIONS TO BE TONGUE AND GROOVED.
3. BENCHES MUST BE PROVIDED IN ALL SANITARY SEWER MANHOLES
4. USE EXTERNAL LIFTING "HOLES" ONLY, BUT NOT FULL PENETRATION.
5. NON-PRECAST OPENINGS SHALL BE CORED AND RUBBER BOOTED.
6. PIPE PENETRATIONS TO BE RUBBER BOOTED AND INTERIOR MORTARED.
7. USE ECCENTRIC CONE ONLY.
8. PRIOR TO THE PLACEMENT OF FINAL LAYER OF ROADWAY, FRAMES AND ADJUSTING RINGS LOCATED WITHIN PAVED AREAS SHALL BE SET IN AN IDOT APPROVED CONCRETE "SI" MIXTURE.

NOT TO SCALE

DATE: 7-27-10

SANITARY MANHOLE DETAIL

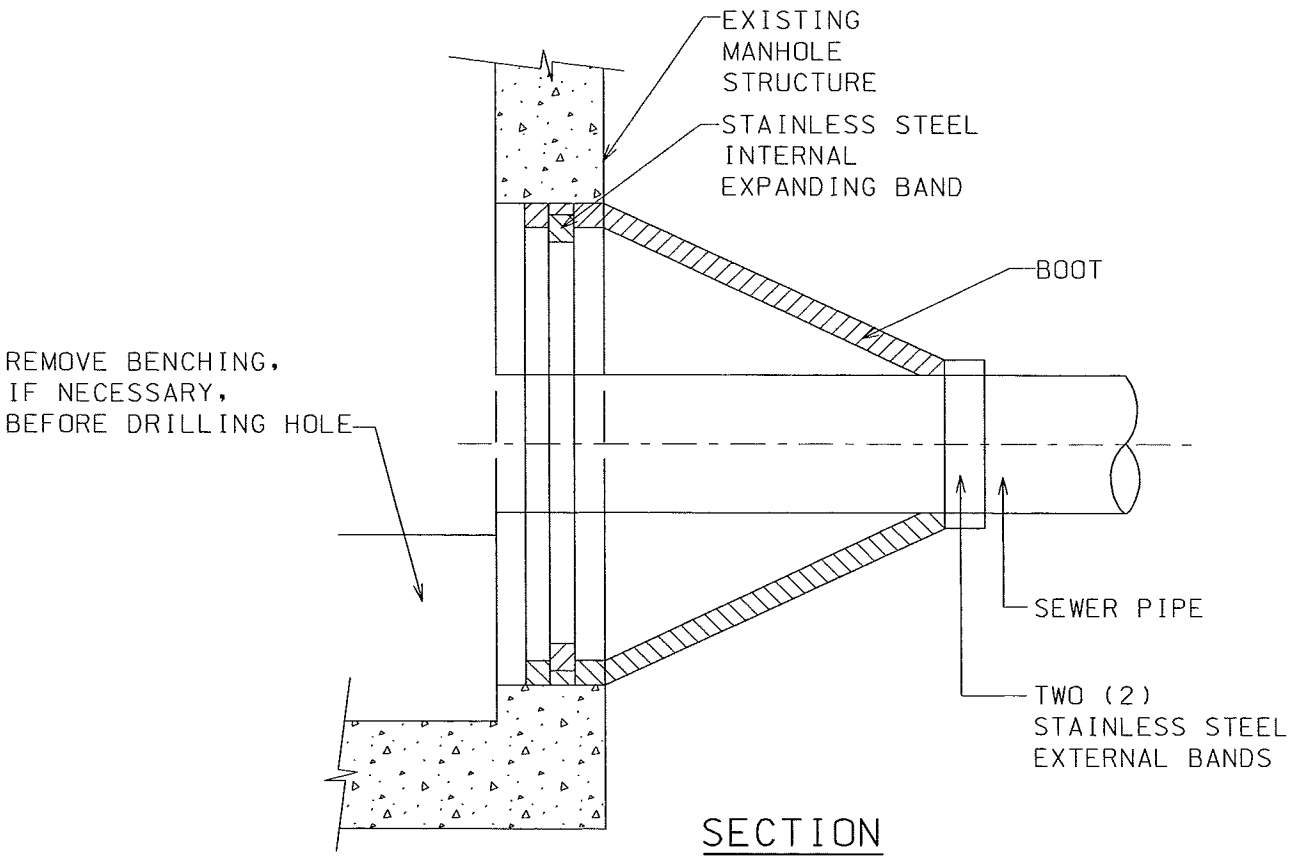

SECTION

NOTES:

1. CORE-DRILL CIRCULAR OPENING IN MANHOLE WALL OF DIAMETER TO FIT THE REQUIRED BOOT SIZE.
2. KOR-N SEAL FLEXIBLE RUBBER BOOT (MANUFACTURED BY NATIONAL POLLUTION CONTROL SYSTEMS, INC. OR AS APPROVED BY THE ENGINEERING DEPARTMENT) SHALL BE USED FOR WATERTIGHT CONNECTION.
3. CUT, SHAPE AND SLOPE NEW INVERT CHANNEL IN THE EXISTING CONCRETE BENCH FOR SMOOTH FLOW FROM NEW SANITARY SEWER CONNECTION.
4. CLEAN EXISTING MANHOLE OF ANY DIRT, CONCRETE OR DEBRIS WHICH MAY ACCUMULATE DURING THE CONSTRUCTION PROCESS.

NOT TO SCALE

SANITARY SEWER CONNECTION TO EXISTING MANHOLE

DATE: 3-31-09

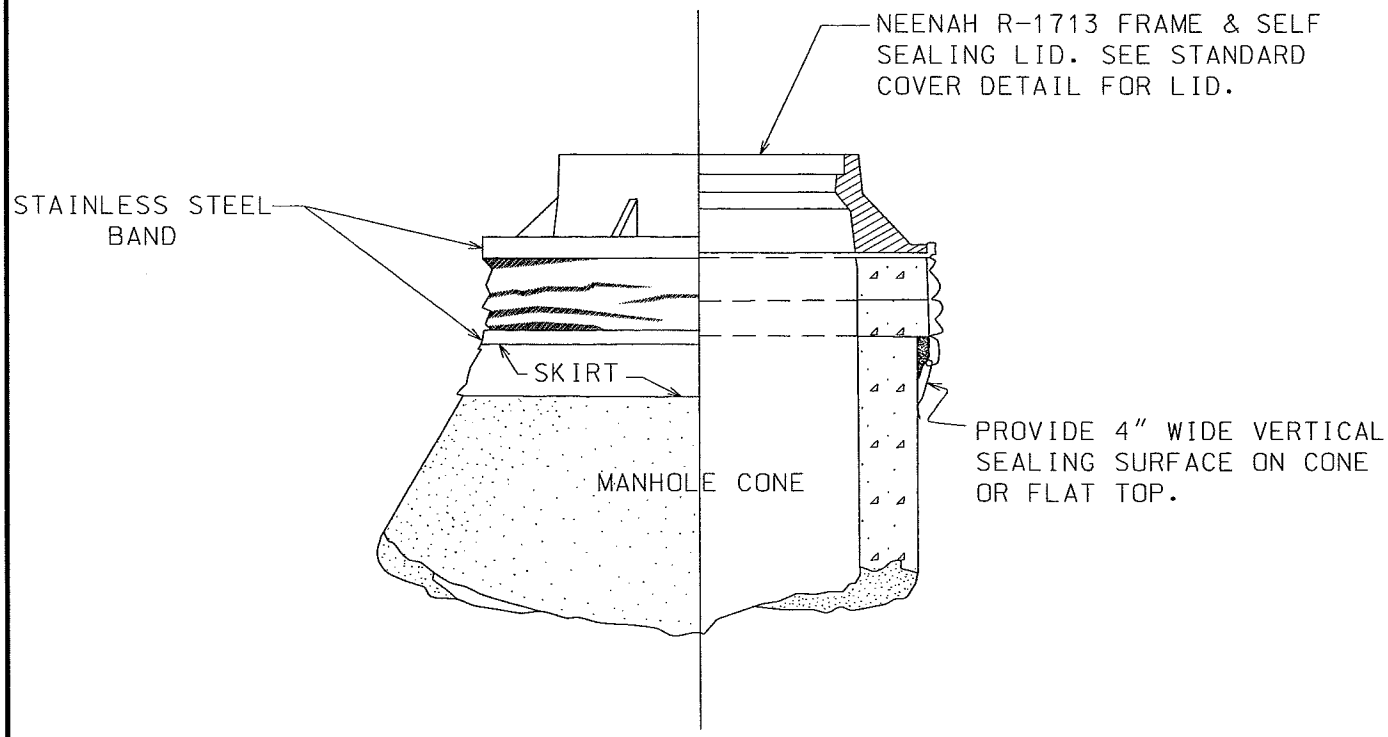

INTERNAL CHIMNEY SEALS TO SPAN CHIMNEY HEIGHTS OF:	
0 - 4½"	CHIMNEY SEAL ONLY
4½" TO 9"	SEAL + 7" EXTENSION
9" TO 12"	SEAL + 10" EXTENSION
OVER 12"	SEAL + MULTI. EXTENSIONS

EXTERNAL CHIMNEY SEALS TO SPAN CHIMNEY HEIGHTS OF:	
0 - 3"	NARROW (6") SEAL ONLY
3 TO 6½"	STANDARD (9") SEAL ONLY
6½" TO 12"	STD. SEAL + EXTENSION
OVER 12"	SEAL + MULTI. EXTENSIONS

NOTE:

1. CHIMNEY SEALS SHALL BE INSTALLED ON ALL SANITARY SEWER SYSTEM MANHOLES.
2. "CRETEX" OR APPORVED EQUAL EXTERNAL/INTERNAL SEALS ARE REQUIRED. OTHER PRODUCTS OR OTHER DESIGN SOLUTIONS SHALL REQUIRE THE APPROVAL OF THE CITY ENGINEERING DEPARTMENT.
3. IF INTERNAL SEALS ARE USED, THE STRUCTURE, INCLUDING ADJUSTMENT RINGS, MUST BE INSPECTED BY CITY PERSONNEL BEFORE INSTALLATION.
4. CHIMNEY SEALS SHALL BE INSTALLED IN ACCORDANCE WITH THE MANUFACTURER'S INSTRUCTIONS.

NOT TO SCALE

DATE: 3-31-09

CHIMNEY SEAL DETAIL

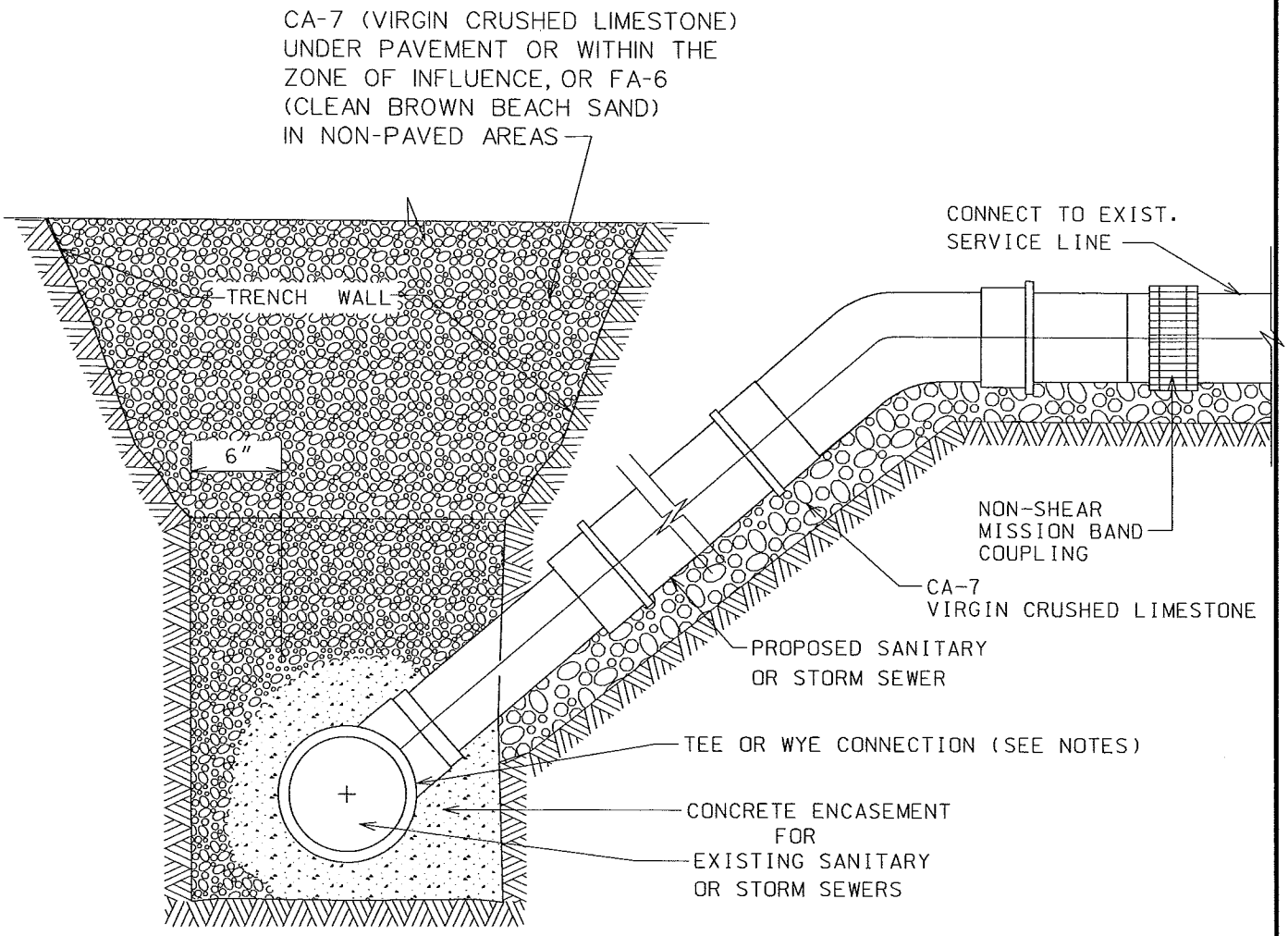

NOTES:

1. FOR PROPOSED STORM SEWER SERVICE $\leq$ 6" ON RCP PIPE $\geq$ 15", CORE THE PIPE AND USE A BOOT CONNECTION.

2. FOR PROPOSED STORM SEWER SERVICE $\geq$ 8", A MANHOLE SHALL BE INSTALLED.

3. FOR CONNECTING SANITARY OR STORM SEWER SERVICE TO AN EXISTING SANITARY OR STORM SEWER $\leq$ 12", REMOVE A SECTION OF PIPE AND INSTALL A TEE OR WYE CONNECTION.

4. FOR CONNECTING SANITARY SEWER SERVICE TO AN EXISTING SANITARY SEWER $\geq$ 15", CIRCULAR SAW-CUT AND USE A HUB WYE OR TEE SADDLE CONNECTION.

5. FOR PROPOSED STORM OR SANITARY SEWER SERVICES, ENCASE ALL CONNECTIONS IN LOW STRENGTH CONCRETE TO PREVENT THE FITTINGS FROM ROTATING.

6. FOR TRENCHES WITHIN AN EXISTING PAVED SURFACE AREA, CA-7 (VIRGIN CRUSHED LIMESTONE) BACKFILL SHALL BE USED.

7. FOR PROPOSED 6" STORM SEWER SUMP LINE, INSTALL PLUG AND 2" X 4" POST AT END OF LINE.

NOT TO SCALE

DATE: 12-8-10

SANITARY AND STORM SERVICE DETAIL

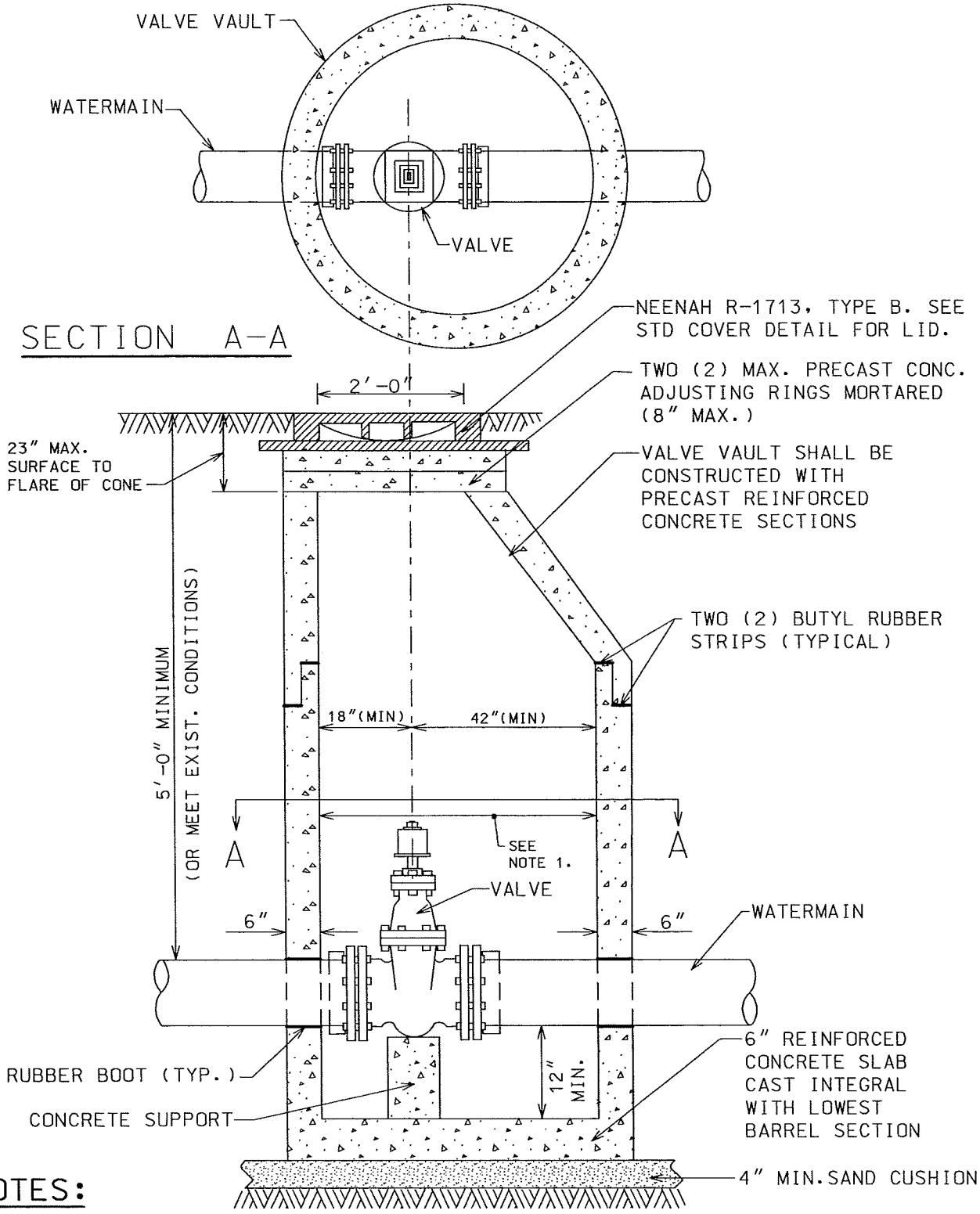

NOTES:

1. 48" MIN. INSIDE DIA. FOR VALVES LESS THAN 8" DIA.
   60" MIN. INSIDE DIA. FOR ALL OTHER VALVE VAULTS.
2. VALVE VAULT MUST CONFORM TO ASTM C-478.
3. USE ECCENTRIC CONE ONLY.
4. VAULT SECTIONS TO BE TONGUE AND GROOVED.
5. NON-PRECAST PIPE OPENINGS TO BE CORED AND RUBBER BOOTS INSTALLED.
6. BACKFILL MATERIAL SHALL BE IDOT CA-7 VIRGIN CRUSHED LIMESTONE.
7. a) MECHANICAL JOINT BOLTS, NUTS & WASHERS SHALL BE COMPOSED OF CORE-TEN.
   b) ALL OTHER HEXAGONAL BOLTS, NUTS & WASHERS SHALL BE COMPOSED OF 304 GRADE STAINLESS STEEL.
8. PRIOR TO THE PLACEMENT OF FINAL LAYER OF ROADWAY, FRAMES AND ADJUSTING RINGS LOCATED WITHIN PAVED AREAS SHALL BE SET IN AN IDOT APPROVED CONCRETE "SI" MIXTURE.

DATE: 11-12-13

NOT TO SCALE

VALVE VAULT DETAIL

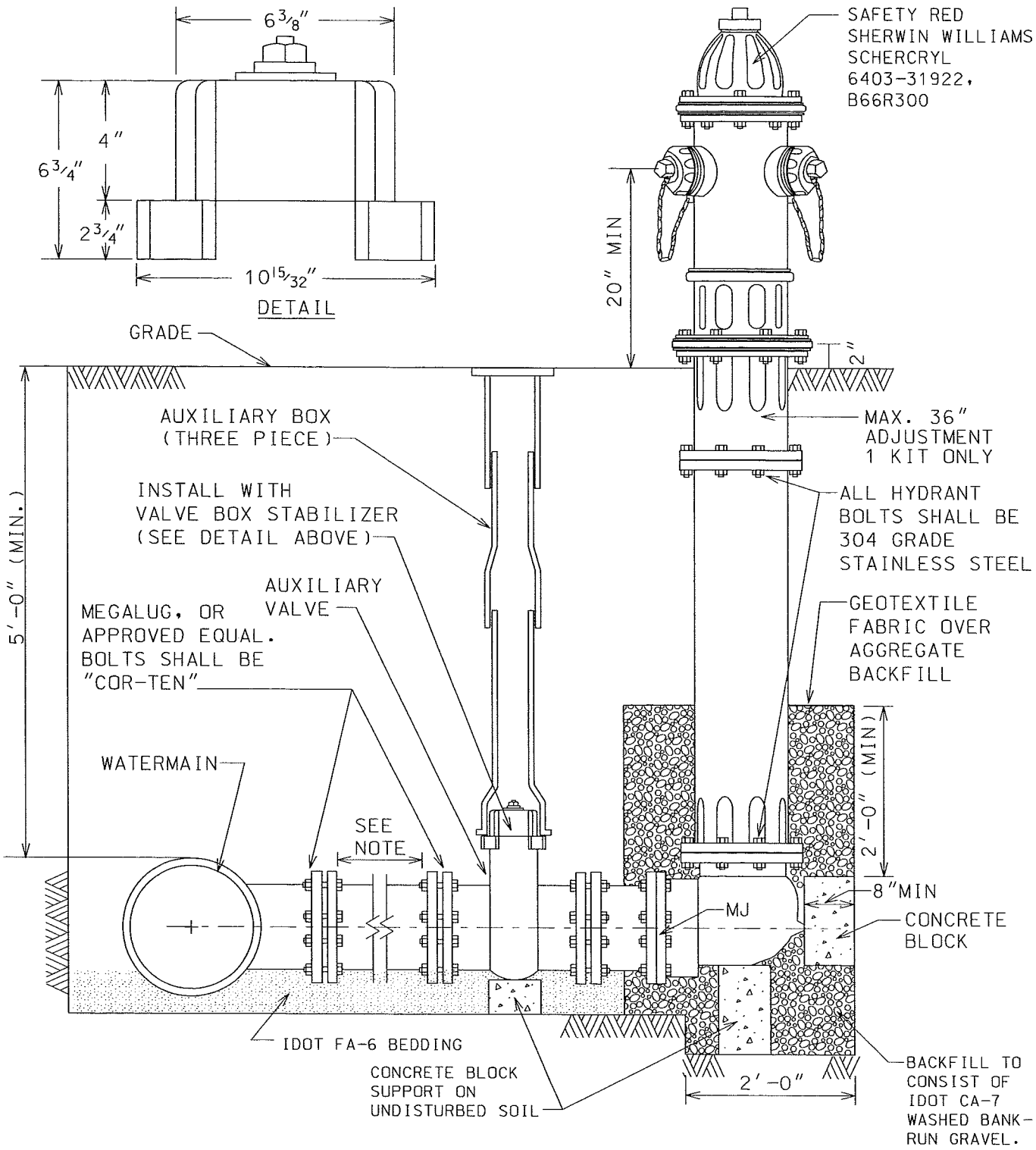

HYDRANT SPECIFICATIONS:

MUELLER SUPER CENTURION 200, WATEROUS PACER MODEL
WB-67-250, OR CLOW MEDALLION.
MECHANICAL JOINT SHOE WITH 6" RESILIENT WEDGE AUXILIARY VALVE.
5-1/4" VALVE OPENING
5' MIN. COVER OVER HYDRANT LATERAL
"HYDRAFINDER" STANDARD HYDRANT LOCATOR, INSTALLED
VALVE BOX SHALL HAVE A VALVE BOX STABILIZER INSTALLED*
*VALVE BOX ADAPTOR #2 TYPE A, AS MADE BY ADAPTOR, INC.
OR APPROVED EQUAL.

NOT TO SCALE

DATE: 11-19-09

HYDRANT INSTALLATION

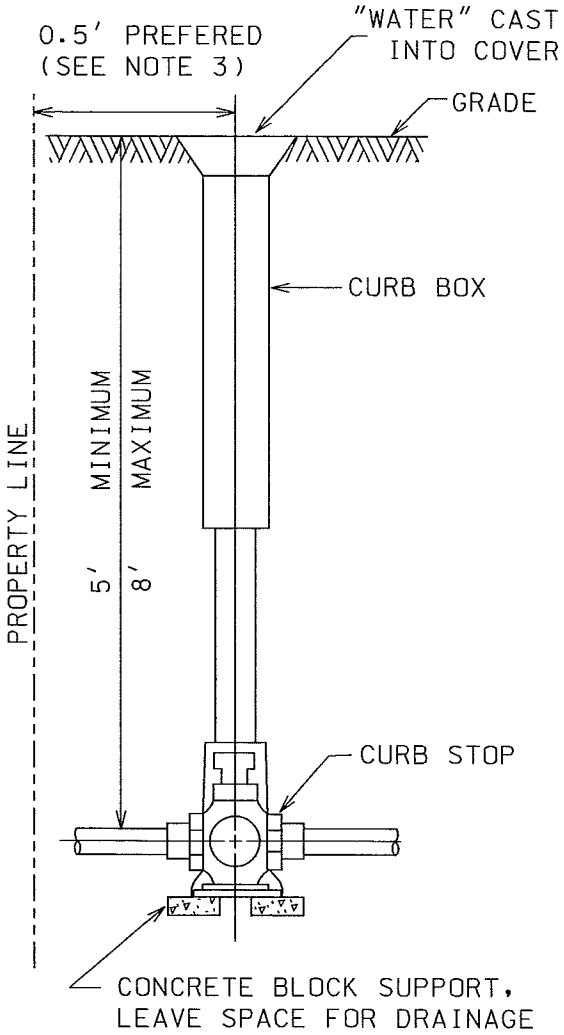

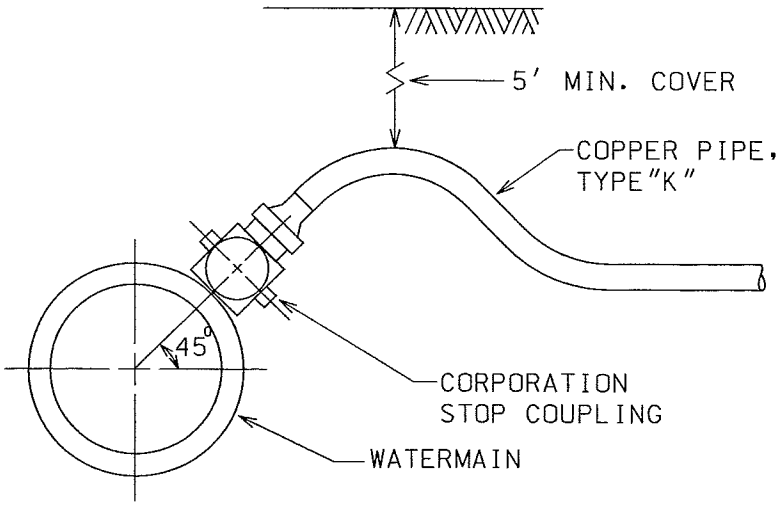

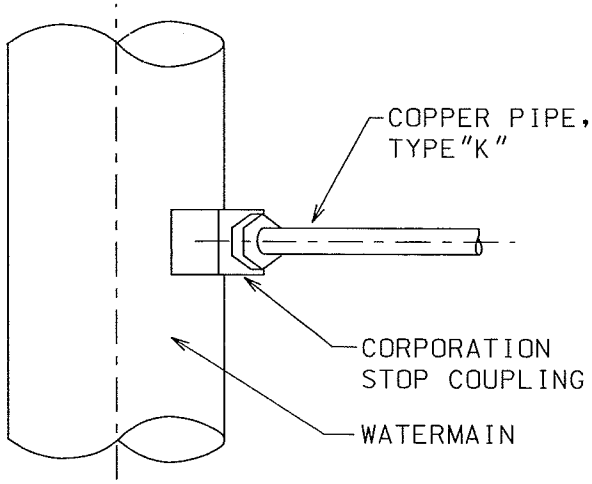

A. CURB BOX:

1. MUELLER H-10300 WITH 1-1/4" I.D. UPPER SECTION AND 2" MINEAPOLIS TAPPED BASE.
2. A.Y. MCDONALD 5615 1-1/4"

B. CURB STOP:

MUELLER B-25155-N (1",1½", 2")
FORD B-44-444-Q-NL 1"
B-44-666-Q-NL 1½"
B-44-777-Q-NL 2"
A.Y. McDONALD 76104-Q 1",1½",2"
Q SERIES BRASS

C. CORPORATION STOP:

MUELLER B-25008-N (1",1-1/2", 2")
FORD FB1000 -4-Q-NL 1"
FB 1000-6-Q-NL 1-1/2"
FB 1000-7-Q-NL 2"
A.Y. McDONALD 74701-BQ 1", 1-1/2", 2"
Q SERIES BRASS, WITH 90 SWIVEL ELBOW

NOTES:

1. PIPE SIZE CAN VARY, BUT 1" MINIMUM. OTHER APPURTENANCES SHALL REFLECT SAME.
2. COPPER PIPE SHALL BE ONE PIECE BETWEEN TAP AND CURB BOX.
3. PLACE BETWEEN SIDEWALK AND PROPERTY LINE. KEEP BOXES OUT OF SIDEWALKS AND DRIVEWAY.
4. MINIMUM OF 3′ BETWEEN TAPS AND 3′ TO NEAREST JOINT.
5. 1" SERVICE MAY BE DIRECTLY TAPPED INTO 6" OR LARGER MAIN. LARGER SERVICES REQUIRE A SMITH-BLAIR 372 OR APPROVED EQUAL STAINLESS STEEL TAP THROUGH SLEEVE.

NOT TO SCALE

DATE: 11-12-13

COPPER WATER SERVICE CONNECTION DETAILS

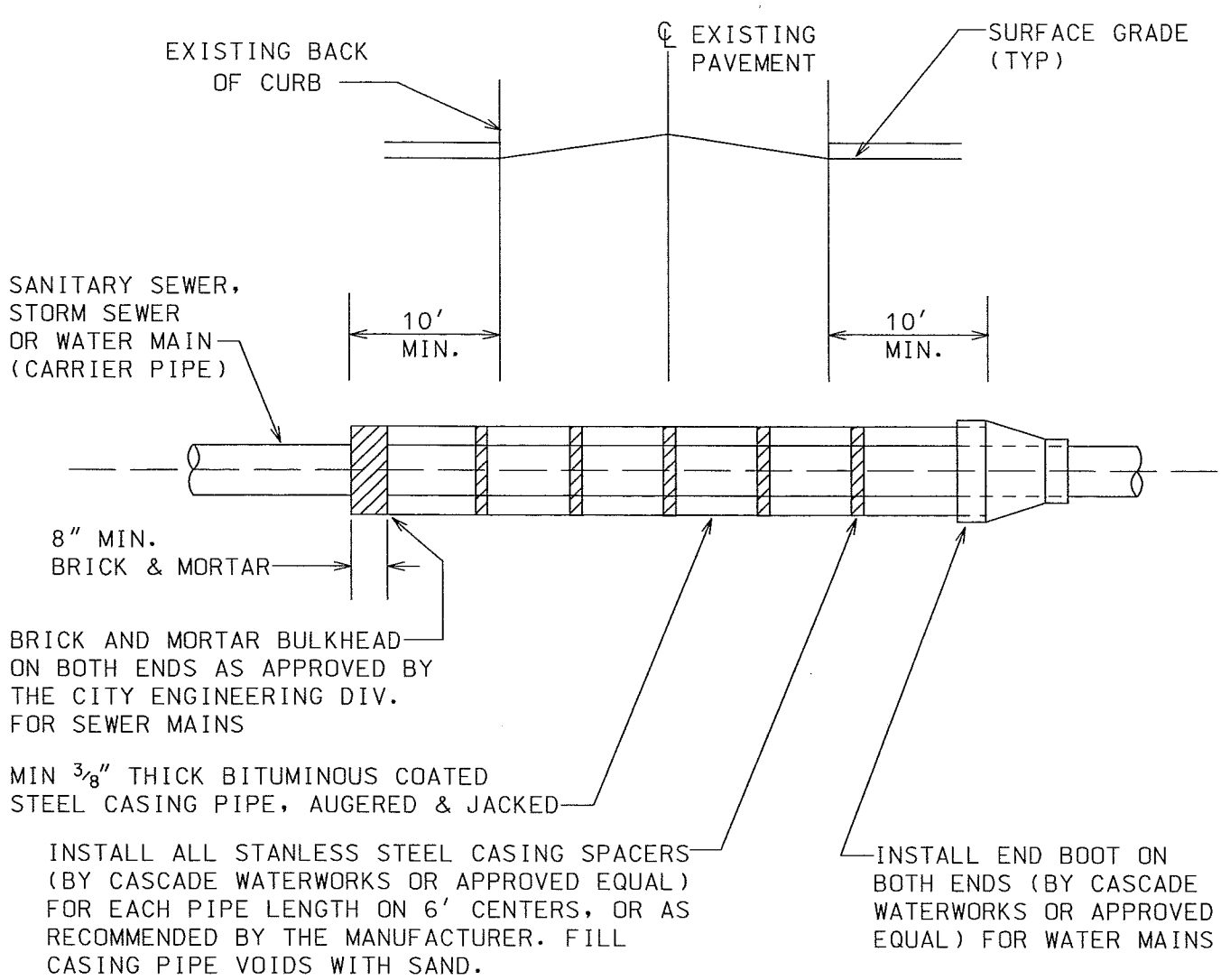

NOTES:

1. CASING PIPE IS REQUIRED UNDER ALL EXISTING ROADWAYS, OR AS OTHERWISE DIRECTED BY THE ENGINEERING DIVISION WHERE OPEN CUTS ARE NOT PERMITTED, EXCEPT FOR WATER SERVICE LINES UP TO 2″ IN DIAMETER.
2. WATER MAIN CASING SPACERS SHALL BE RESTRAINED IN POSITION.
3. THE INSIDE DIAMETER OF THE CASING PIPE SHALL BE DETERMINED BY CONTRACTOR BUT IN NO CASE SHALL IT BE LESS THAN 8″ LARGER THAN THE DIAMETER OF THE CARRIER PIPE TO ALLOW AMPLE SPACE FOR BELLS, AND CARRIER PIPE SLOPE (FOR GRAVITY PIPE).
4. ALL AUGER PITS TO BE BACKFILLED WITH IDOT CA-7 VIRGIN CRUSHED LIMESTONE MATERIAL.
5. POLY WRAPPED WATER MAIN REQUIRED IN CASING.

NOT TO SCALE

DATE: 11-12-13

CASING PIPE DETAIL

Minimum Restrained Lenghts (in feet) back from both sides of fitting

Fitting type/nominal size	4"	6"	8"	10"	12"	16"
90 Degree Bend	17	25	32	38	45	59
45 Degree Bend	7	10	13	16	19	24
22.5 Degree Bend	3	5	6	8	9	12
11.25 Degree Bend	2	2	3	4	4	6
Dead End	39	55	73	87	103	134
Top Side Vertical Offset * (45 Degree)	16	23	30	36	43	55
Bottom Side Vertical Offset * (45 Degree)	4	6	8	10	11	15
Tee Run X Branch ** 6" by	1	17				
Tee Run X Branch ** 8" by	1	5	34			
Tee Run X Branch ** 10" by	1	1	24	49		
Tee Run X Branch ** 12" by	1	1	15	41	65	
Tee Run X Branch ** 16" by	1	1	1	26	52	95
Reducer *** 6" by	28					
Reducer *** 8" by	52	30				
Reducer *** 10" by	71	54	29			
Reducer *** 12" by	90	75	55	51		
Reducer *** 16" by	123	113	97	94	54	

* Vertical offset with minimum 10'of solid pipe between upper and lower bend.

** Tee with MINIMUM 10' solid pipe on both sides of run.
Number indicates length of branch to be restrained.

*** Length back from Large Eng of Reducer.

DATE: 3-31-09

WATER MAIN RESTRAINT

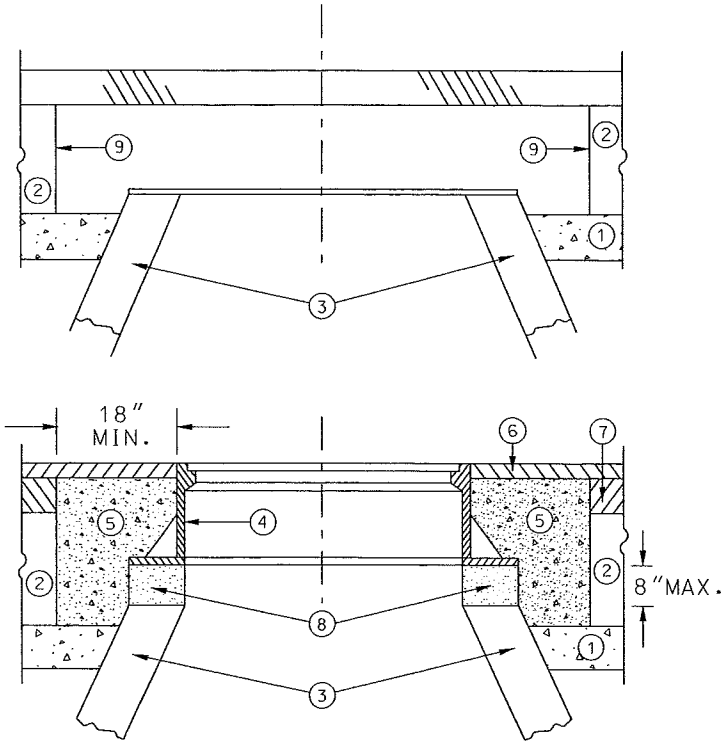

LEGEND

1. SUB-BASE GRANULAR MATERIAL
2. EXISTING PAVEMENT
3. EXISTING STRUCTURE
4. FRAME AND LID (SEE NOTES)
5. CLASS SI CONCRETE
6. PROPOSED HMA SURFACE COURSE
7. PROPOSED HMA BINDER COURSE
8. PROPOSED MORTAR, STEEL SHIMS & ADJUSTING RINGS 8" MAXIMUM
9. FULL DEPTH SAW CUT

NOTES:

EXISTING FRAMES AND LIDS SHALL BE REMOVED AND RETURNED TO THE CITY OF ST. CHARLES BY THE CONTRACTOR AND SHALL BE REPLACED AS DIRECTED BY THE ENGINEER.

CITY OF ST. CHARLES CASTINGS ARE THE PROPERTY OF THE CITY AND THE CONTRACTOR SHALL NOTIFY THE CITY OF REMOVAL AND DISPOSITION OF THE CASTINGS.

INSTALLATION OF NEW OR ADJUSTMENTS TO EXISTING FRAMES & LIDS WILL NOT BE PAID FOR SEPARATELY BUT ARE INCLUDED AS PART OF THE COST PER EACH ARE INCLUDED AS PART OF THE COST PER EACH ADJUSTED, SPECIAL".

CONSTRUCTION PROCEDURES

STAGE 1 (AFTER PAVEMENT MILLING AND PLACEMENT OF HMA BINDER)

A) FULL DEPTH SAW CUT 5' X 5' SQUARE OR DIAMOND AROUND CENTER OF FRAME TO BE ADJUSTED

B) REMOVE FRAME, EXISTING PAVEMENT AND AGGREGATE MATERIAL TO A DEPTH OF 2" BELOW TOP OF MANHOLE STRUCTURE OR 2" BELOW BOTTOM OF LOWEST ADJUSTMENT RING.

C) ADJUST NEW FRAME TO MATCH PROPOSED HMA PAVEMENT SURFACE GRADE USING MORTAR, STEEL SHIMS EMBEDDED IN MORTAR, AND PRECAST CONCRETE ADJUSTING RINGS.

D) COMPACT EXISTING AGGREGATE STONE BASE.

E) FILL 5'X5' SURROUNDING SPACE WITH IDOT APPROVED CLASS SI CONCRETE TO THE SAME ELEVATION OF THE TOP OF THE BINDER COURSE.

F) PAVE SURFACE COURSE OVER 5'X 5' CONCRETE COLLAR.

THE PROCEDURE EXPLAINED ABOVE SHALL CONFORM TO THE APPLICABLE PORTIONS OF SECTIONS 353, 406, 602, AND 603 OF THE STANDARD SPECIFICATIONS

DATE: 12-8-10

NOT TO SCALE

FRAME AND LID ADJUSTMENT WITH CONCRETE COLLAR

SPECIAL LETTERED R-1713 HDSI WATER VAULT, SANITARY AND STORM SEWER MANHOLE COVER

1 ½" (38.1 mm) LETTERS
(RECESSED FLUSH)

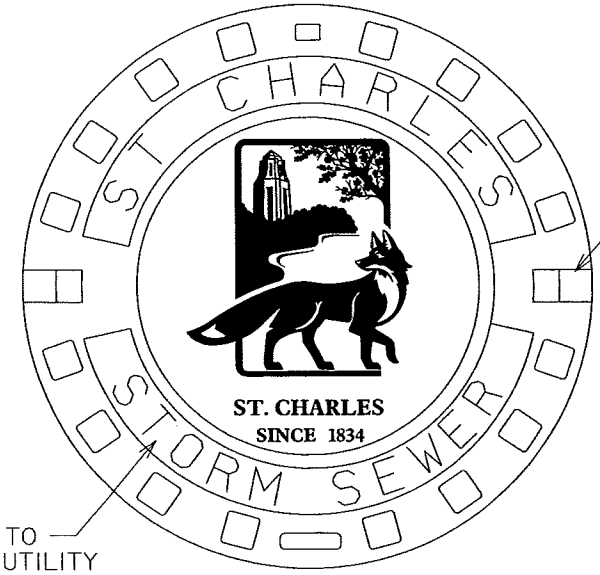

(2) CLOSED PICKHOLES

REVISE TO MATCH UTILITY

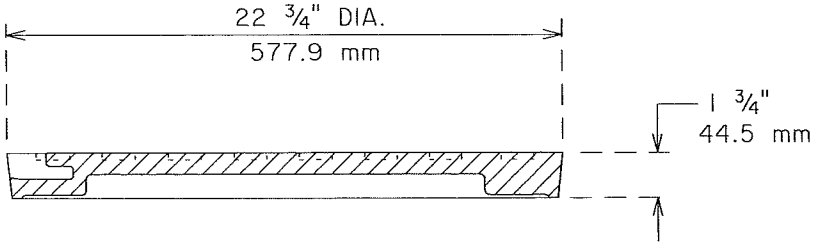

HEAVY DUTY
MATERIAL ASTM A48 CL 35
MACHINED BEARING SURFACE
COVER WT: 125 LBS (56.7 kg)

NOT TO SCALE

DATE: 11-19-09

STANDARD COVER DETAIL

DEPRESSED CURB

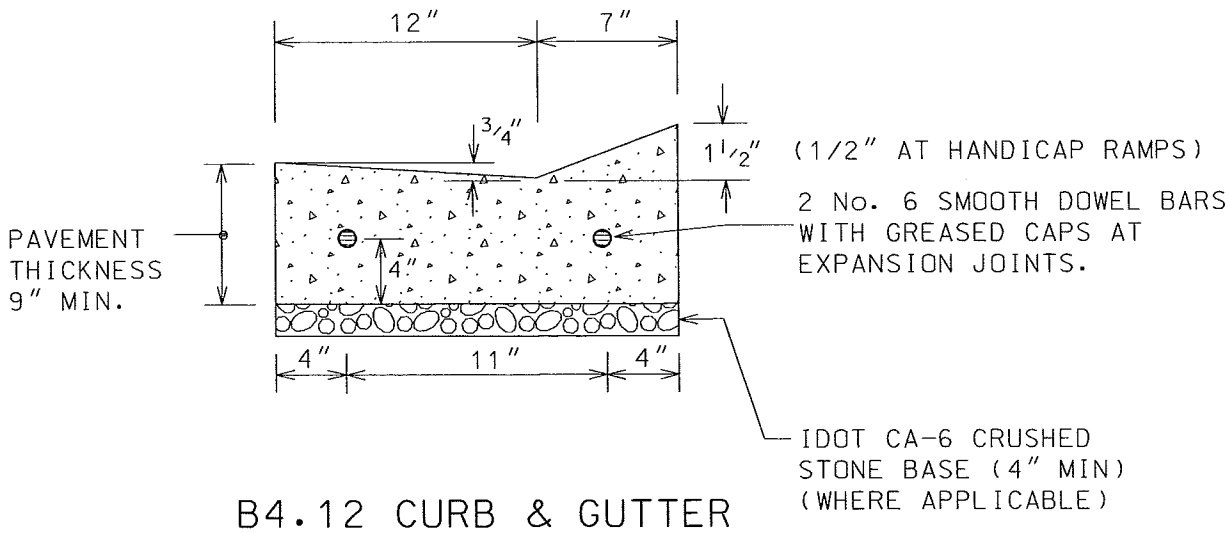

B4.12 CURB & GUTTER

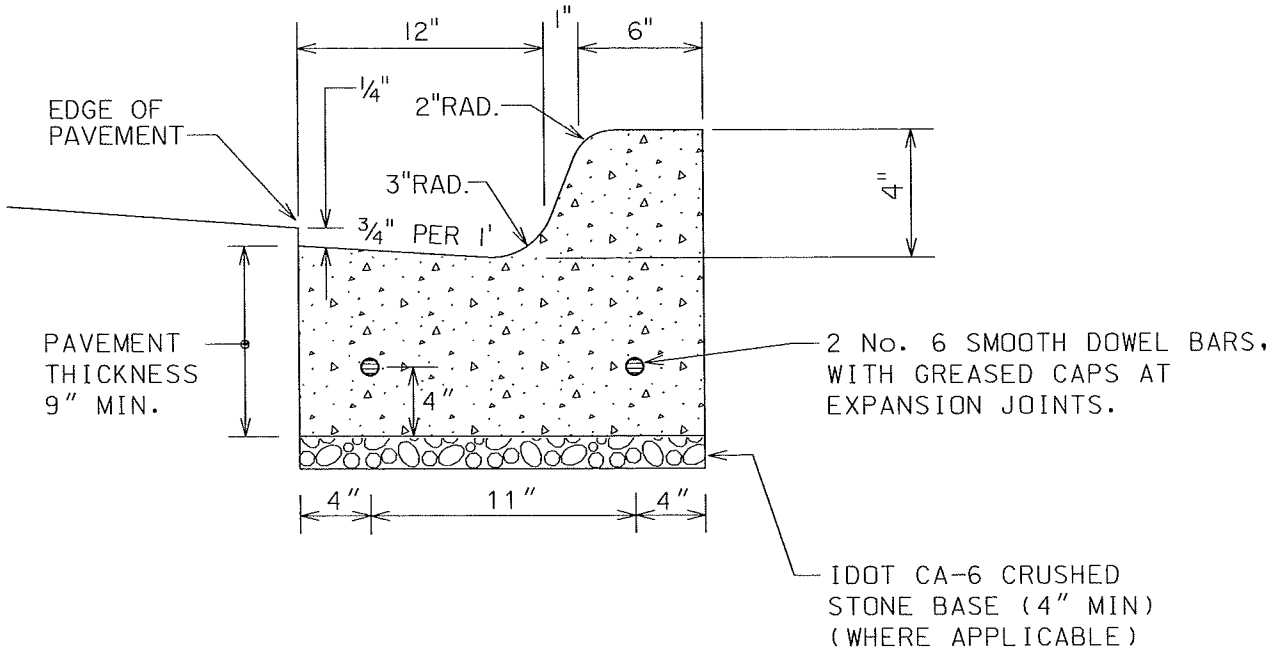

NOTES:

1. CONTRACTION JOINTS SHALL BE PLACED AT 15' INTERVALS, AND SHALL BE GROOVED WITH AN EDGING TOOL. SEE ARTICLE 420.10 OF IDOT STANDARD SPECIFICATIONS.

2. EXPANSION JOINTS SHALL BE PLACED AT 60' (MAX) INTERVALS, AT ALL P.C.'S AND P.T.'S, CURB RETURNS, AND AT THE END OF EACH POUR

3. P.C.C. SHALL CONSIST OF IDOT CLASS SI (6.1 BAG MIX) CONCRETE, WITH 5% TO 8% AIR ENTRAINMENT, AND A MINIMUM COMPRESSIVE STRENGTH OF 3,500 PSI AT 14 DAYS.(NO FLY ASH ALLOWED)

FOR RESIDENTIAL STREETS ONLY

DATE: 10-22-10
NOT TO SCALE

B4.12 COMB. CONCRETE CURB AND GUTTER (SPECIAL)
B4.12 P.C.C. INTEGRAL CURB AND GUTTER (SPECIAL)

DEPRESSED CURB

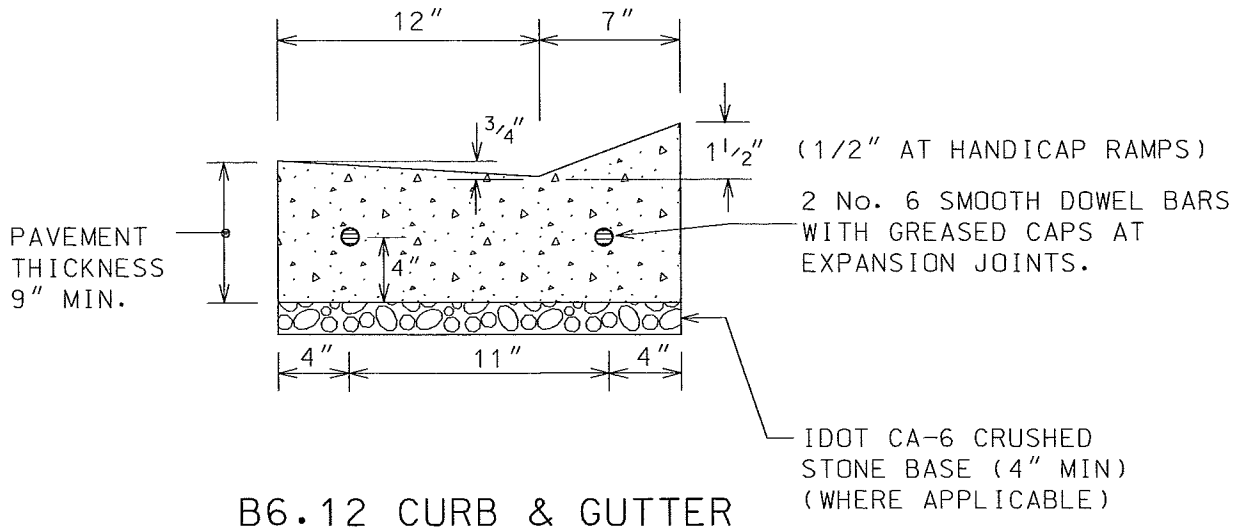

B6.12 CURB & GUTTER

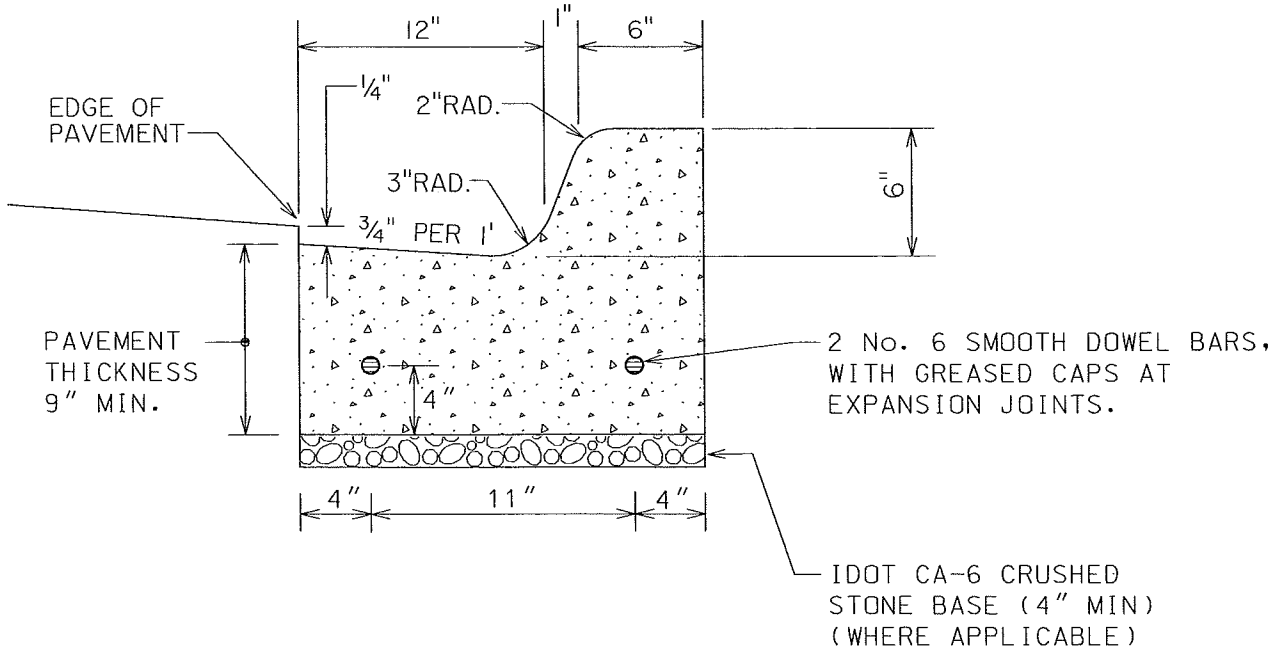

NOTES:

1. CONTRACTION JOINTS SHALL BE PLACED AT 15' INTERVALS, AND SHALL BE GROOVED WITH AN EDGING TOOL. SEE ARTICLE 420.10 OF IDOT STANDARD SPECIFICATIONS.

2. EXPANSION JOINTS SHALL BE PLACED AT 60' (MAX) INTERVALS, AT ALL P.C.'S AND P.T.'S, CURB RETURNS, AND AT THE END OF EACH POUR

3. P.C.C. SHALL CONSIST OF IDOT CLASS SI (6.1 BAG MIX) CONCRETE, WITH 5% TO 8% AIR ENTRAINMENT, AND A MINIMUM COMPRESSIVE STRENGTH OF 3,500 PSI AT 14 DAYS.(NO FLY ASH ALLOWED)

FOR RESIDENTIAL STREETS ONLY

DATE: 10-22-10
NOT TO SCALE

B6.12 COMB. CONCRETE CURB AND GUTTER (SPECIAL)
B6.12 P.C.C. INTEGRAL CURB AND GUTTER (SPECIAL)

DEPRESSED CURB

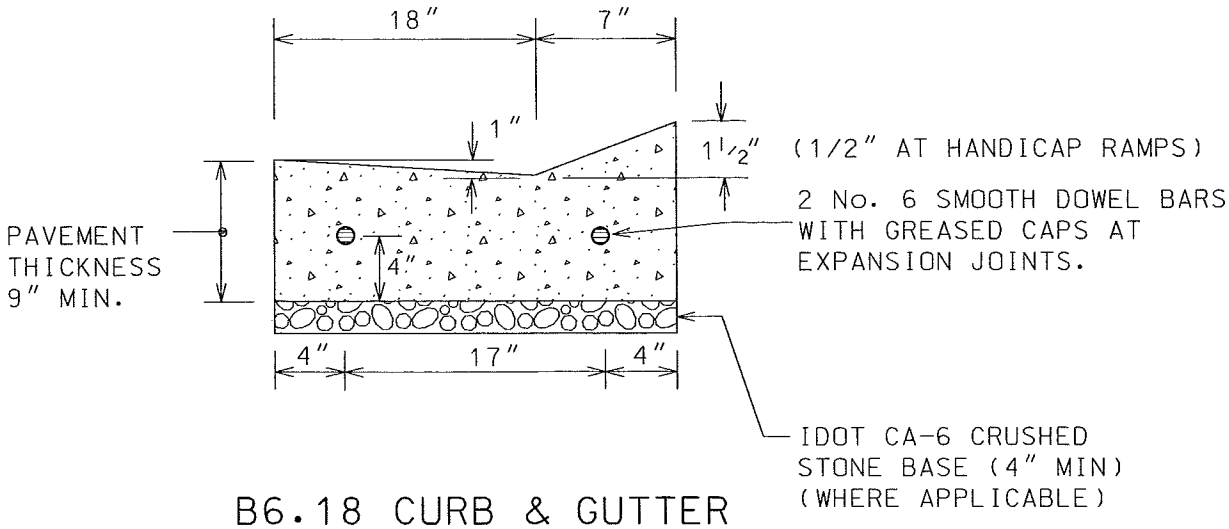

B6.18 CURB & GUTTER

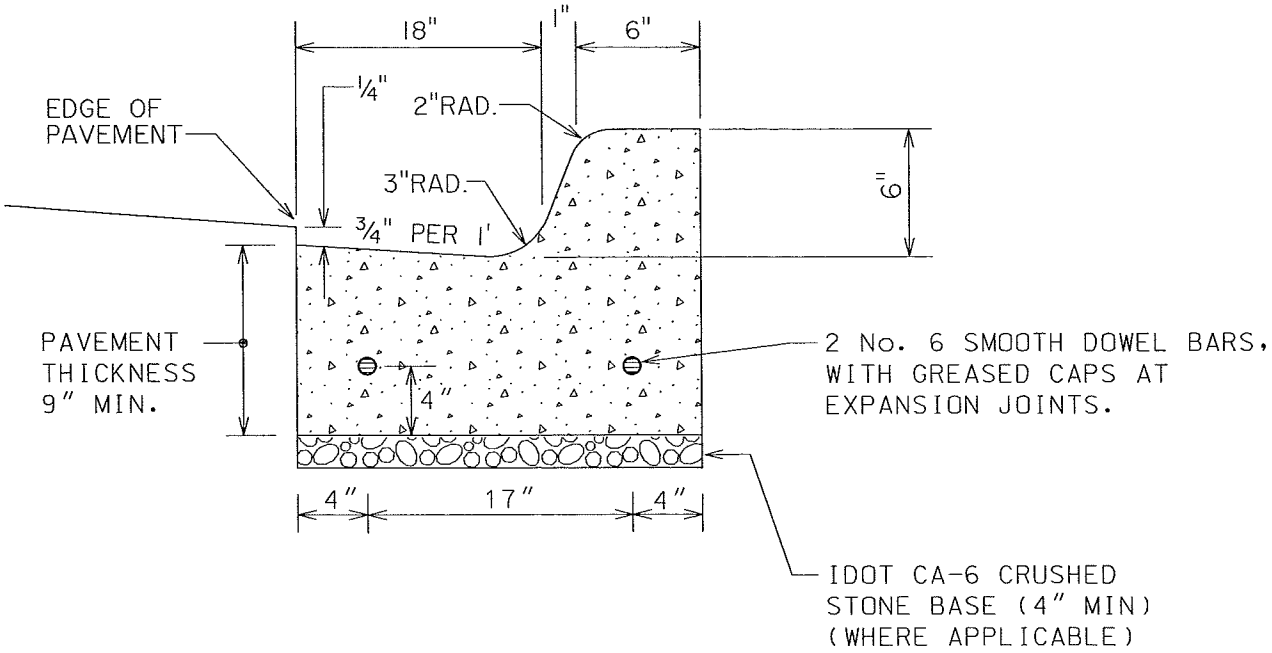

NOTES:

1. CONTRACTION JOINTS SHALL BE PLACED AT 15' INTERVALS, AND SHALL BE GROOVED WITH AN EDGING TOOL. SEE ARTICLE 420.10 OF IDOT STANDARD SPECIFICATIONS.

2. EXPANSION JOINTS SHALL BE PLACED AT 60' (MAX) INTERVALS, AT ALL P.C.'S AND P.T.'S, CURB RETURNS, AND AT THE END OF EACH POUR

3. P.C.C. SHALL CONSIST OF IDOT CLASS SI (6.1 BAG MIX) CONCRETE, WITH 5% TO 8% AIR ENTRAINMENT, AND A MINIMUM COMPRESSIVE STRENGTH OF 3,500 PSI AT 14 DAYS.(NO FLY ASH ALLOWED)

FOR RESIDENTIAL STREETS ONLY

DATE: 10-22-10
NOT TO SCALE

B6.18 COMB. CONCRETE CURB AND GUTTER (SPECIAL)
B6.18 P.C.C. INTEGRAL CURB AND GUTTER (SPECIAL)

MOUNTABLE CONCRETE CURB & GUTTER

MOUNTABLE CURB

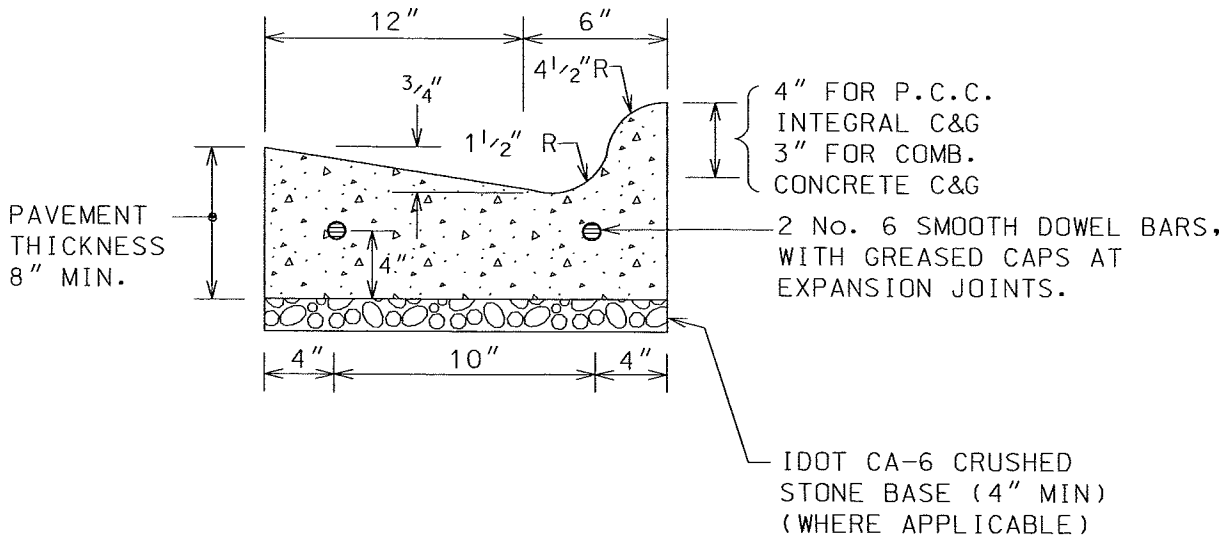

NOTES:

1.) ½" THICK PREFORMED EXPANSION JOINTS SHALL BE INSTALLED AT 50 FOOT INTERVALS. PROVIDE 2-3/4" STEEL DOWEL BARS AT EXPANSION JOINTS.

2.) EXPANSION JOINTS SHALL BE INSTALLED ON EACH SIDE, A DISTANCE OF 2 FEET FROM A STRUCTURE THAT FALLS WITHIN THE CURB AND GUTTER.

3.) CONSTRUCTION JOINTS SHALL BE SAWED TO A MINIMUM DEPTH OF 2 INCHES AND PLACED AT 10 FOOT INTERVALS. SAW CUTS SHALL BE SAWED NO SOONER THAN 6 HOURS AND NO LATER THAN 24 HOURS AFTER PLACEMENT OF CONCRETE.

4.) CURBS SHALL BE CONSTRUCTED IN ACCORDANCE WITH THE "STANDARD SPECIFICATIONS FOR ROAD AND BRIDGE CONSTRUCTION" (IDOT). MOST RECENT EDITION UNLESS NOTED OR DEPICTED HEREIN.

5.) A PROTECTIVE COAT SHALL BE APPLIED IN ACCORDANCE WITH THE STANDARD SPECIFICATIONS.

DATE: 9-30-10

MOUNTABLE CURB & GUTTER

DEPRESSED CURB

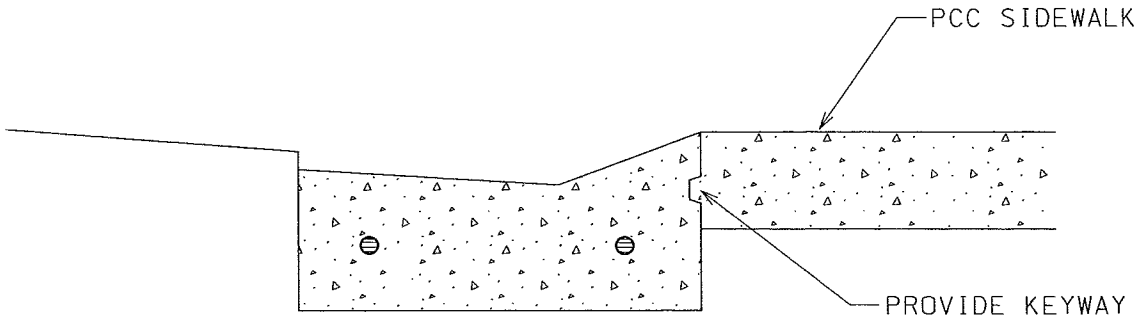

CURB & GUTTER

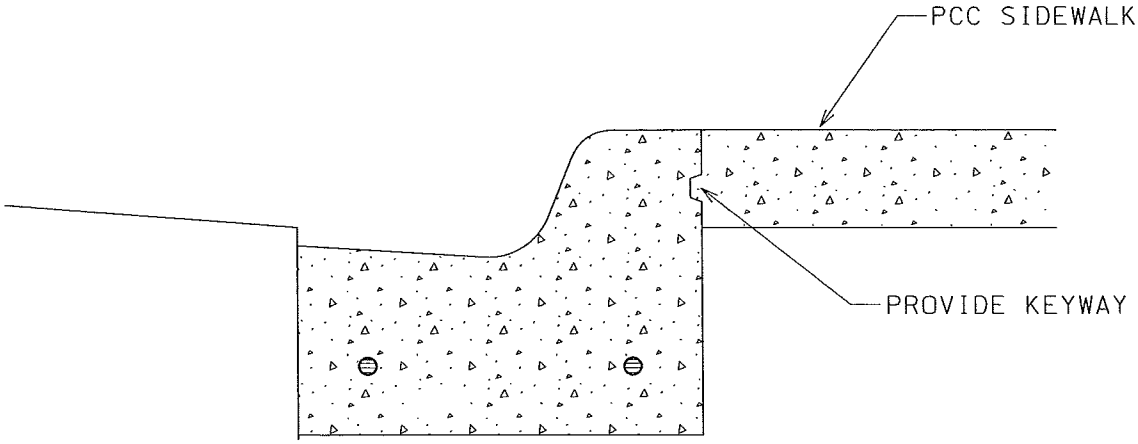

NOTES:

1. SEE TYPICAL DETAIL FOR CURB AND GUTTER FOR CURB DIMENSIONS AND SPECIFICATIONS.

NOT TO SCALE

DATE: 3-31-09

SIDEWALK AT CURB AND GUTTER

A. FLEXIBLE PAVEMENT

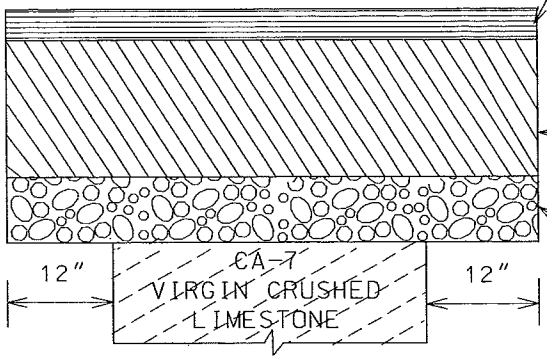

$1\frac{1}{2}$" (MIN) HOT MIX ASPHALT SURFACE COURSE (PLACED ON SECOND DAY, OR AS DIRECTED BY ENGINEERING DEPARTMENT) CONFORM TO IDOT HMA MIX SELECTION TABLE

$8\frac{1}{4}$" (MIN) HOT MIX ASPHALT OR MATCH EXISTING THICKNESS, WHICHEVER IS GREATER

4" (MIN) SUBBASE GRANULAR MATERIAL

B. RIGID PAVEMENT

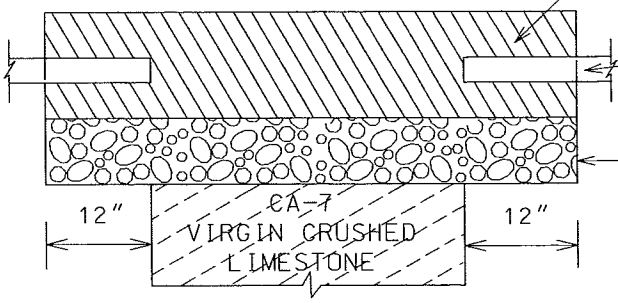

9" (MIN) PORTLAND CEMENT CONCRETE OR MATCH EXIST. THICKNESS, WHICHEVER IS GREATER

No.6 EPOXY COATED DOWEL BARS, MIN. 24" LONG GROUTED IN PLACE AT 24" C.C.

4" (MIN) SUBBASE GRANULAR MATERIAL

C. COMPOSITE PAVEMENT

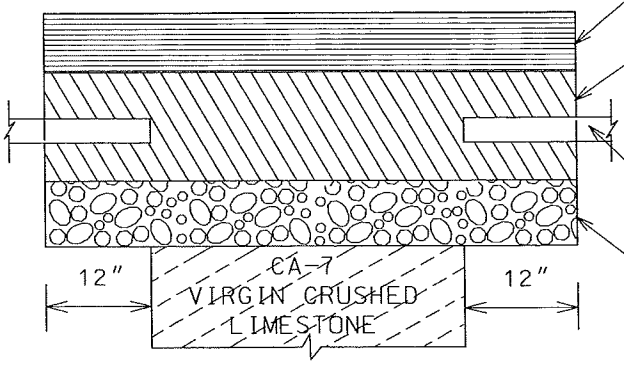

$2\frac{1}{2}$" (MIN) HOT MIX ASPHALT SURFACE COURSE, CONFORM TO IDOT HMA MIX SELECTION TABLE

8" (MIN) PORTLAND CEMENT CONCRETE OR MATCH EXIST. THICKNESS, WHICHEVER IS GREATER

No.6 EPOXY COATED DOWEL BARS, MIN. 24" LONG GROUTED IN PLACE AT 24" C.C.

4" (MIN) SUBBASE GRANULAR MATERIAL

NOTE:

1. ALL PAVEMENT PATCHES SHALL BE SAWCUT FULL-DEPTH A MINIMUM OF ONE FOOT BEYOND THE LIMITS OF THE FAILED PAVEMENT IN ALL DIRECTIONS.
2. PORTLAND CEMENT CONCRETE SHALL CONFORM TO IDOT CLASS PP MIN. 3,500 PSI (6.1 BAG MIX) AT 14 DAYS, WITH 5 % TO 7 % AIR ENTRAINMENT.(NO FLY ASH ALLOWED)

NOT TO SCALE

DATE: 12-8-10

PAVEMENT PATCH DETAIL

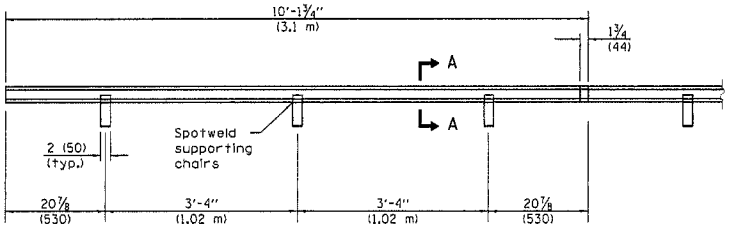

TYPE C METAL JOINT

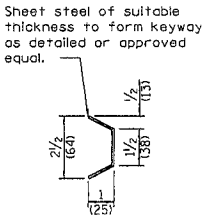

SECTION A–A

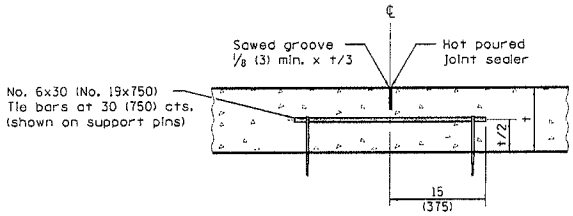

LONGITUDINAL SAWED JOINT

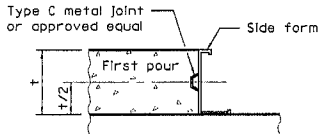

LONGITUDINAL KEYED JOINT

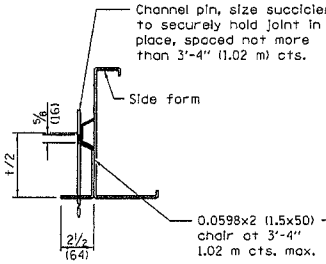

SUPPORTING CHAIR ALTERNATE

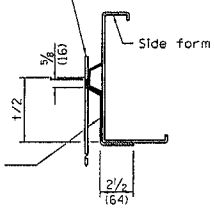

SUPPORTING CHAIR ALTERNATE

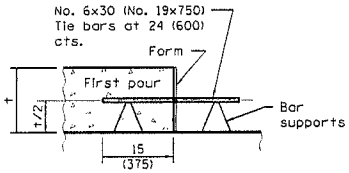

LONGITUDINAL CONSTRUCTION JOINT
(TIE BAR FORMED IN PLACE)

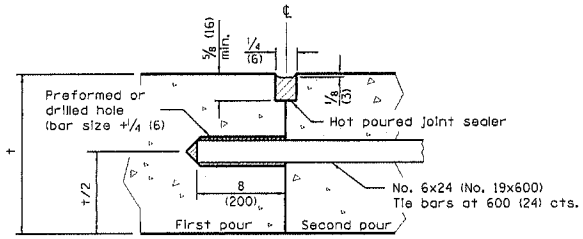

LONGITUDINAL CONSTRUCTION JOINT
(TIE BAR GROUTED IN PLACE)

GENERAL NOTES

All slope ratios are expressed as units of vertical displacement to units of horizontal displacement (V:H).

All dimensions are in inches (millimeters) unless otherwise shown.

Illinois Department of Transportation

PASSED January 1, 2008
ENGINEER OF POLICY AND PROCEDURES
APPROVED January 1, 2008
ENGINEER OF DESIGN AND ENVIRONMENT

ISSUED 1-1-97

DATE	REVISIONS
1-1-08	Switched units to
	English (metric).
8-1-05	Added supports to long.
	constr. jt. and revised
	note for trans. exp. jt.

PAVEMENT JOINTS

(Sheet 1 of 2)

STANDARD 420001–07

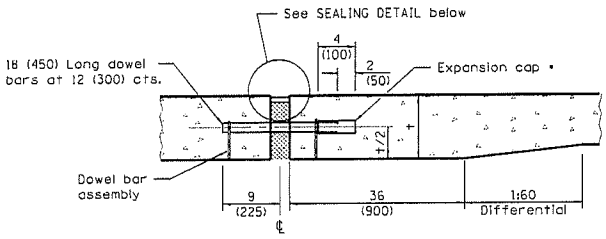

TRANSVERSE EXPANSION JOINT
(FOR PAVEMENTS WITH UNEQUAL THICKNESS)

• Expansion caps shall be installed on the exposed end of each dowel bar once the header has been removed and the joint filler material has been installed.

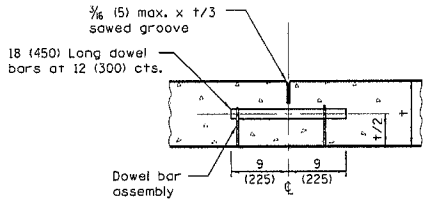

TRANSVERSE CONTRACTION JOINT

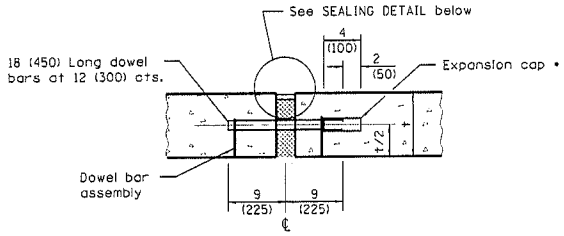

TRANSVERSE EXPANSION JOINT
(FOR PAVEMENTS WITH EQUAL THICKNESS)

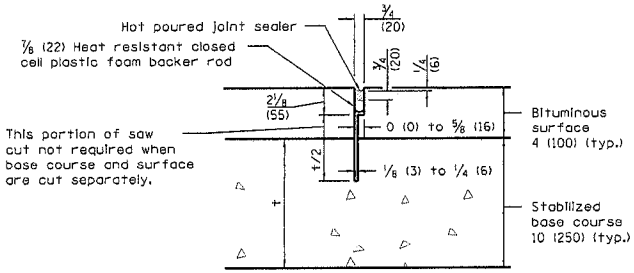

TRANSVERSE CONTRACTION JOINT
(FOR CAM, CFA AND LFA BASE COURSE MIXTURES)

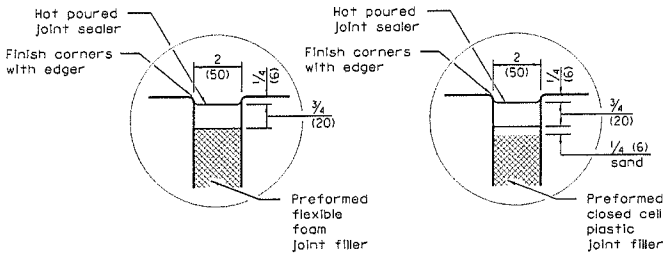

SEALING DETAIL

DOWEL BAR TABLE	
PAVEMENT THICKNESS	DOWEL BAR DIAMETER
8 (200) or greater	1 1/2 (38)
7 (175) thru 7.99 (199)	1 1/4 (32)
Less than 7 (175)	1 (25)

Illinois Department of Transportation

PASSED January 1, 2008
ENGINEER OF POLICY AND PROCEDURES

APPROVED January 1, 2008
ENGINEER OF DESIGN AND ENVIRONMENT

BDE 1-1-07

PAVEMENT JOINTS

(Sheet 2 of 2)

STANDARD 420001-07

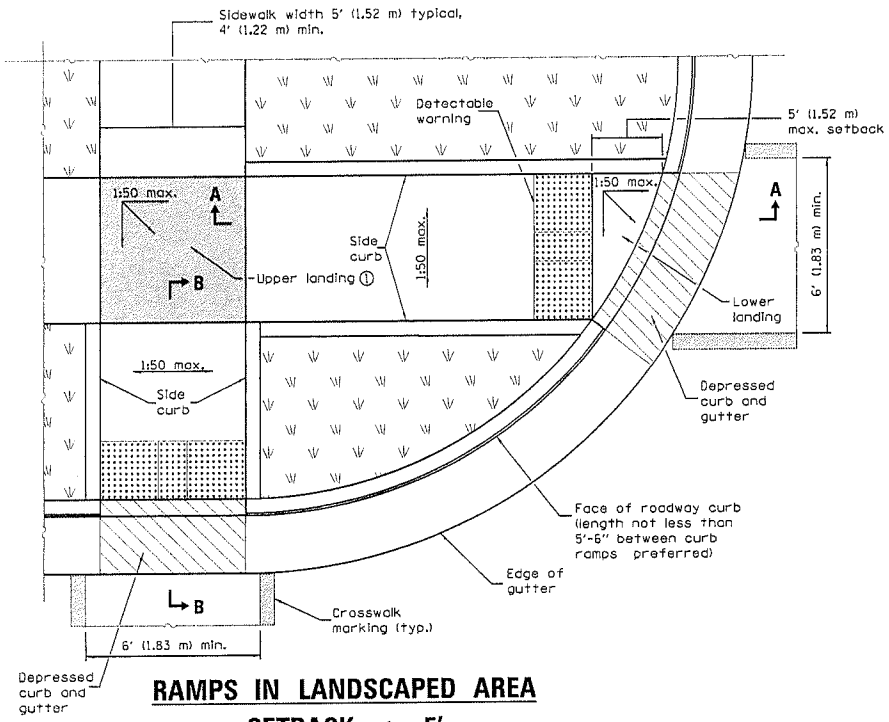

RAMPS IN LANDSCAPED AREA

SETBACK ≤ 5'

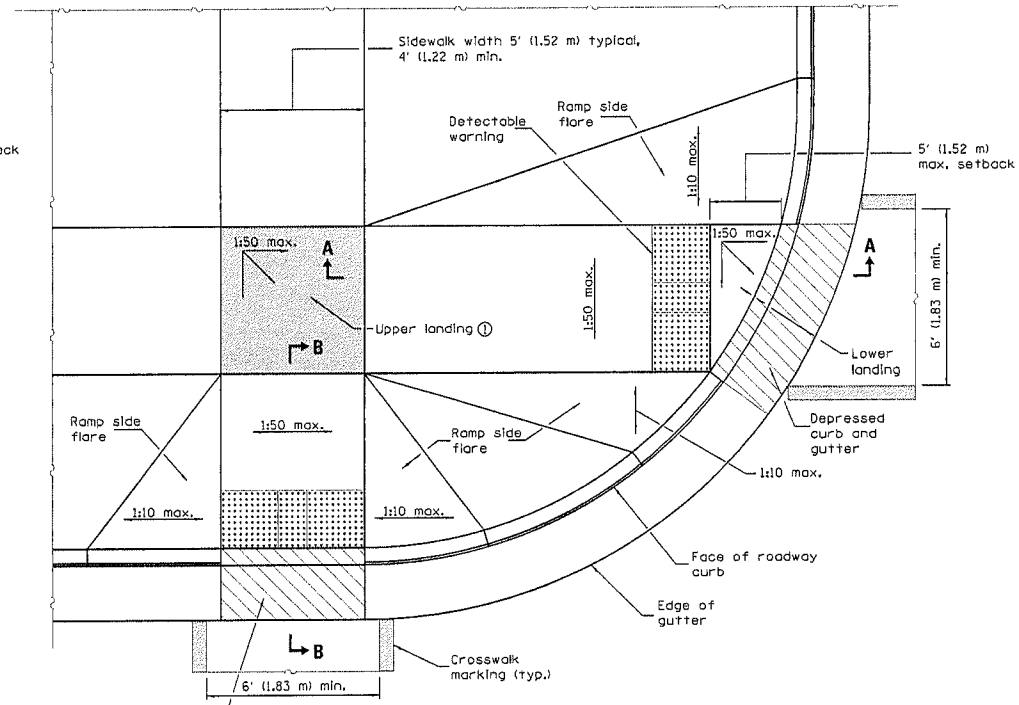

RAMPS IN PAVED AREA

SETBACK ≤ 5'

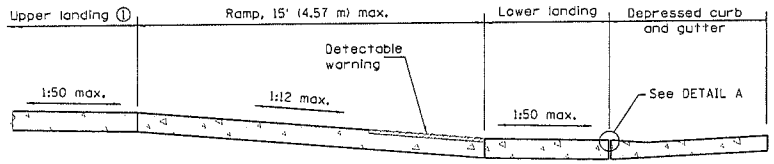

SECTION A–A

① Upper landing not required for ramp slopes flatter than 1:20.

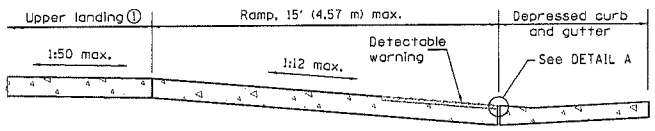

SECTION B–B

① Upper landing not required for ramp slopes flatter than 1:20.

GENERAL NOTES

All slope ratios are expressed as units of vertical displacement to units of horizontal displacement (V:H).

Where 1:50 maximum slope is shown, 1:64 is preferred.

See Standard 606001 for details of depressed curb adjacent to curb ramp.

All dimensions are in inches (millimeters) unless otherwise shown.

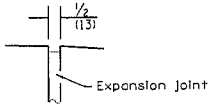

DETAIL A

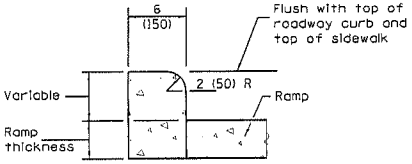

SIDE CURB DETAIL

DATE	REVISIONS
1-1-13	Widened crosswalk markings
	to 6' (1.83 m) min. inside
	dimension. Rev. Gen. Notes.
1-1-12	Completely revised and
	renamed standard.

PERPENDICULAR CURB RAMPS FOR SIDEWALKS

(Sheet 1 of 2)

STANDARD 424001–07

Illinois Department of Transportation

PASSED January 1, 2013
ENGINEER OF POLICY AND PROCEDURES

APPROVED January 1, 2013
ENGINEER OF DESIGN AND ENVIRONMENT

ISSUED 1-1-97

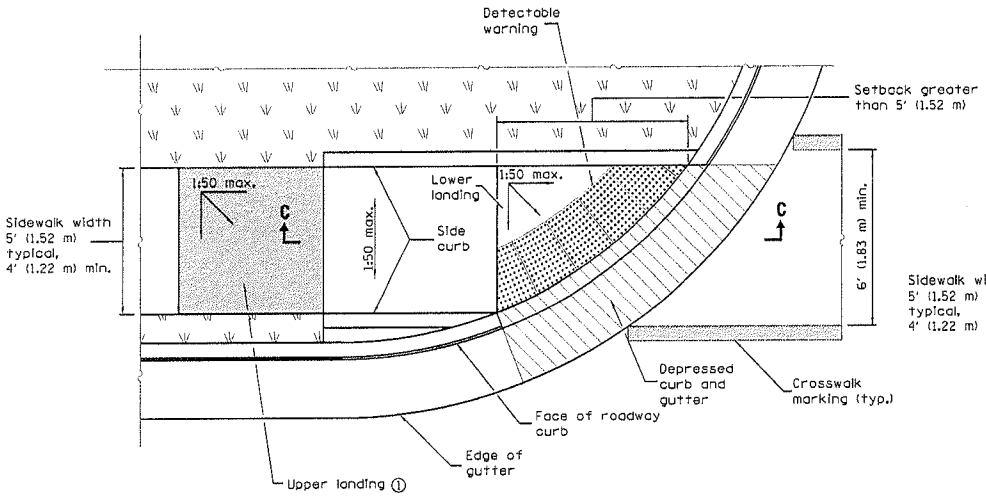

RAMP IN LANDSCAPED AREA
SETBACK > 5'

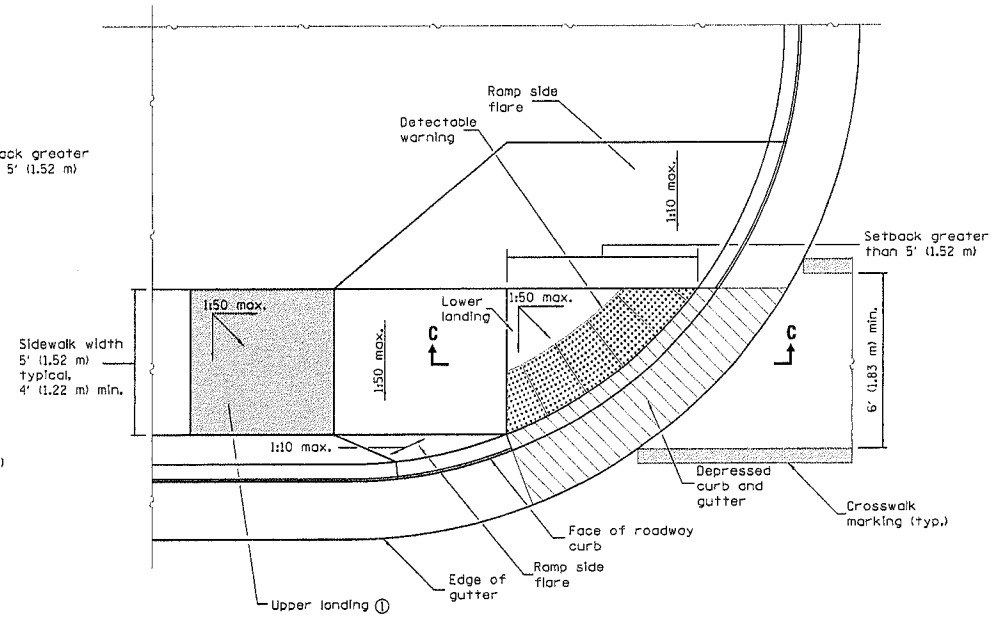

RAMP IN PAVED AREA
SETBACK > 5'

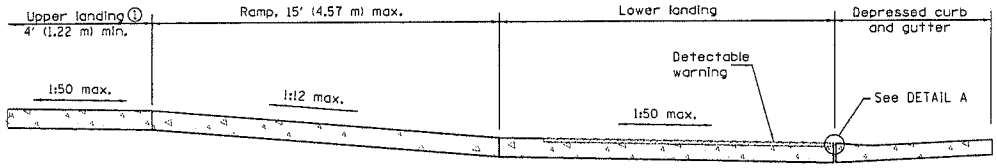

SECTION C–C

① Upper landing not required for ramp slopes flatter than 1:20.

Illinois Department of Transportation

PASSED January 1, 2013
ENGINEER OF POLICY AND PROCEDURES

APPROVED January 1, 2013
ENGINEER OF DESIGN AND ENVIRONMENT

BDE 1-1-97

PERPENDICULAR CURB RAMPS FOR SIDEWALKS

(Sheet 2 of 2)

STANDARD 424001–07

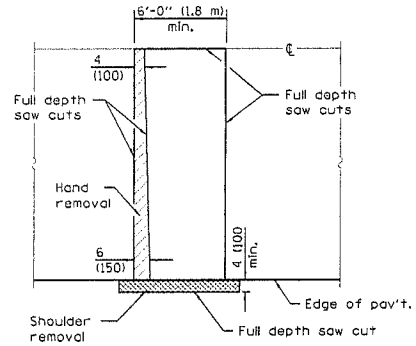

PAVEMENT SAWING DETAIL

(HMA SHOULDER)

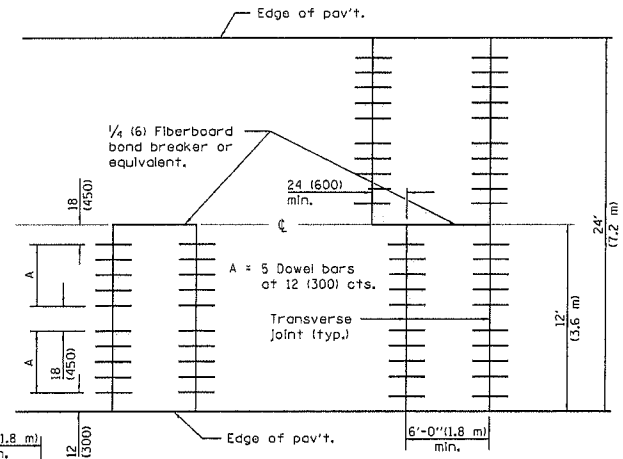

12' (3.6 m) WIDE LANES

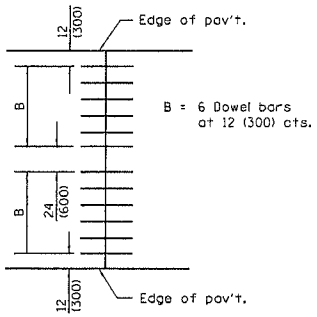

14' (4.2 m) WIDE RAMP

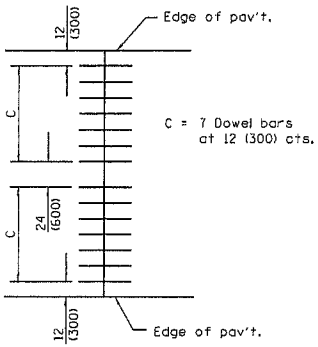

16' (4.8 m) WIDE RAMP

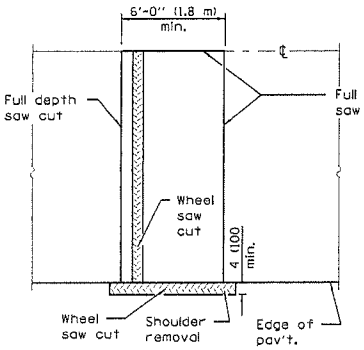

ALTERNATE SAWING DETAIL

(HMA SHOULDER)

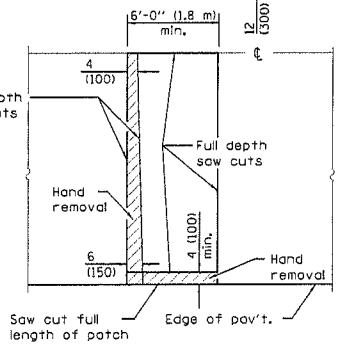

PAVEMENT SAWING DETAIL

(PCC SHOULDER)

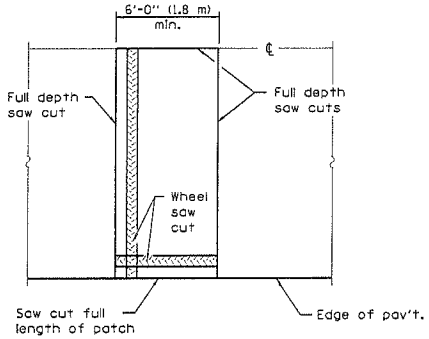

ALTERNATE SAWING DETAIL

(PCC SHOULDER)

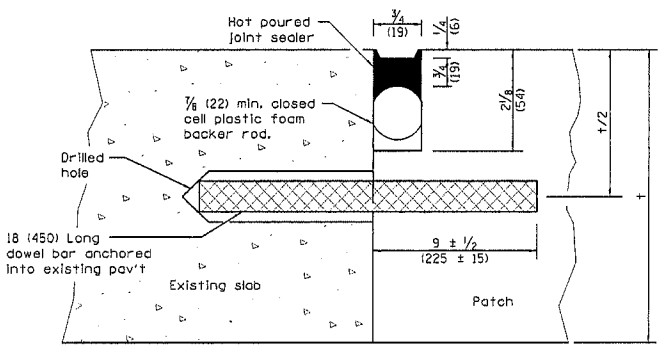

TRANSVERSE JOINT

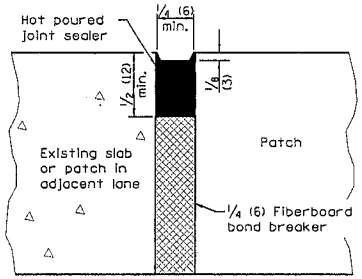

CENTERLINE JOINT

DOWEL BAR TABLE		
PAVEMENT THICKNESS	DOWEL BAR DIAMETER	HOLE DIAMETER
8 (200) or greater	1 1/2 (38)	1 5/8 (41)
7 (180) thru 7.99 (199)	1 1/4 (32)	1 3/8 (35)
Less than 7 (180)	1 (25)	1 1/8 (29)

GENERAL NOTES

The transverse joints for Class B patches shall align with joints or cracks in the adjacent lane whenever possible.

See Standard 420701 for details of pavement fabric.

All dimensions are in inches (millimeters) unless otherwise shown.

Illinois Department of Transportation

PASSED January 1, 2008
ENGINEER OF POLICY AND PROCEDURES
APPROVED January 1, 2008
ENGINEER OF DESIGN AND ENVIRONMENT

BBS 1-1-07

DATE	REVISIONS
1-1-08	Switched units to English (metric).
1-1-07	Revised General Notes.

CLASS B PATCHES

(Sheet 1 of 2)

STANDARD 442101-07

TRANSVERSE EXPANSION JOINTS

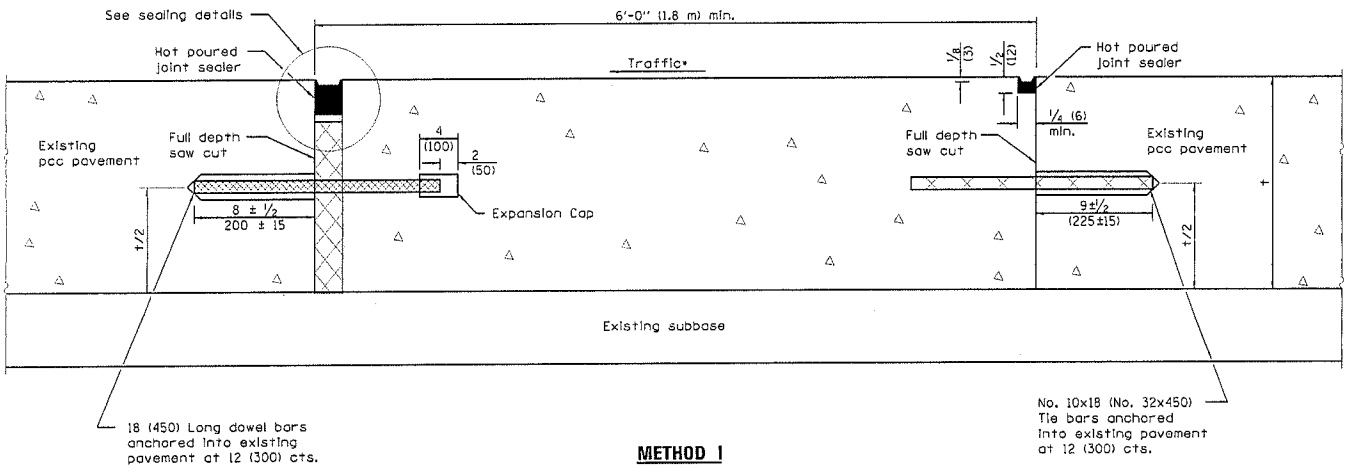

METHOD I

(Without Resurfacing)

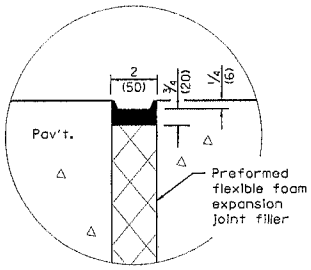

SEALING DETAIL

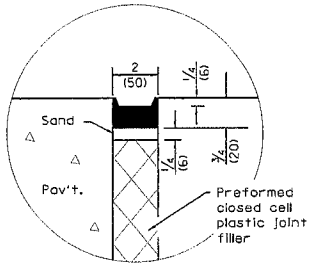

SEALING DETAIL

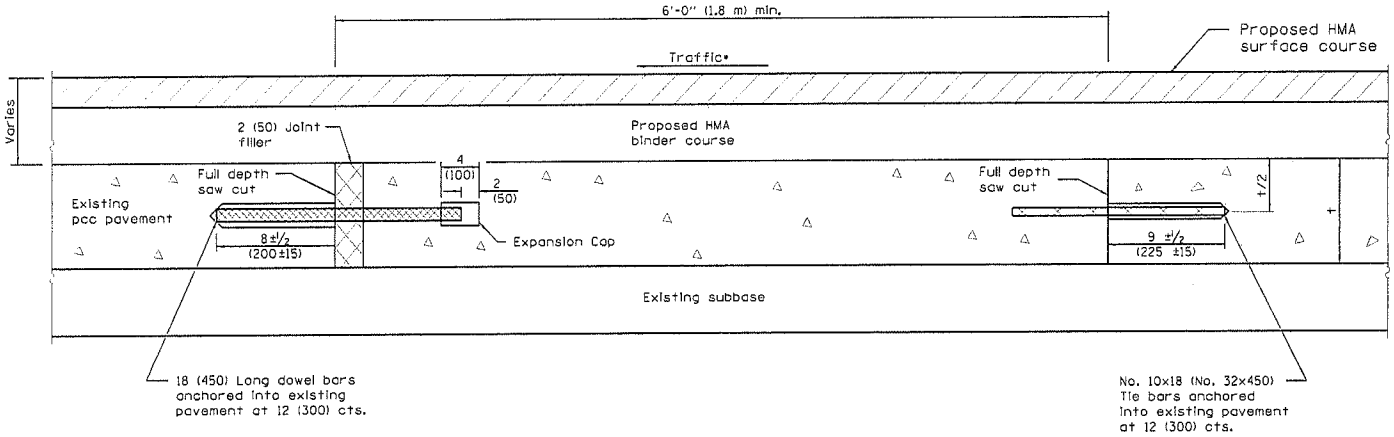

METHOD II

(With Resurfacing)

NOTE

- When re-establishing a transverse expansion joint on a two-lane, two-way road, reverse the orientation of the dowel bars with respect to traffic for one of the patches such that the joint will be continuous across both lanes.

Illinois Department of Transportation

PASSED January 1, 2008
ENGINEER OF POLICY AND PROCEDURES

APPROVED January 1, 2008
ENGINEER OF DESIGN AND ENVIRONMENT

ISSUED 1-1-97

CLASS B PATCHES

(Sheet 2 of 2)

STANDARD 442101-07

CLASS C

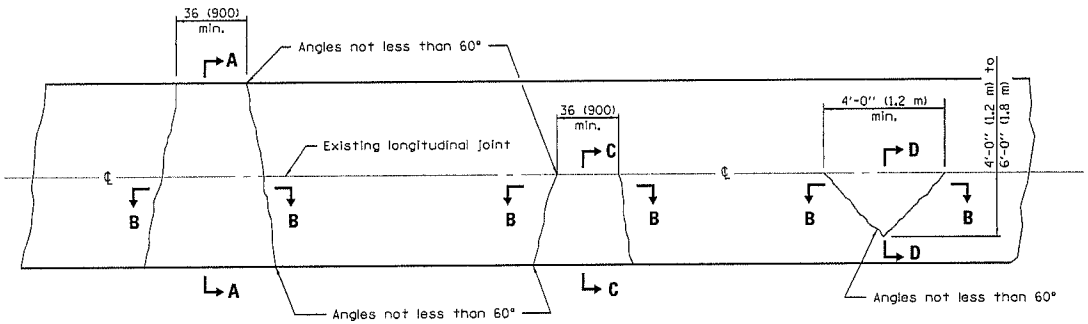

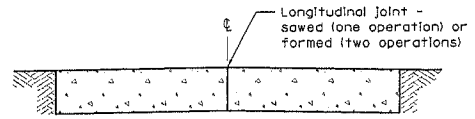

SECTION A–A

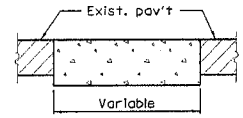

SECTION B–B

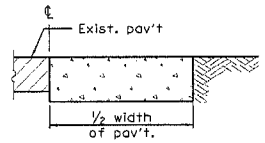

SECTION C–C

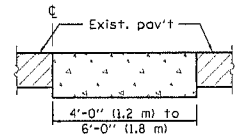

SECTION D–D

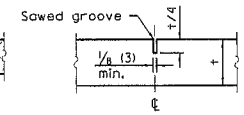

DETAIL OF SAWED CONTRACTION JOINT

Note:
Longitudinal joints shall be as detailed on Standard 420001, except tie bars are not required for patches 20'-0" (6.0 m) or less in length.

CLASS D

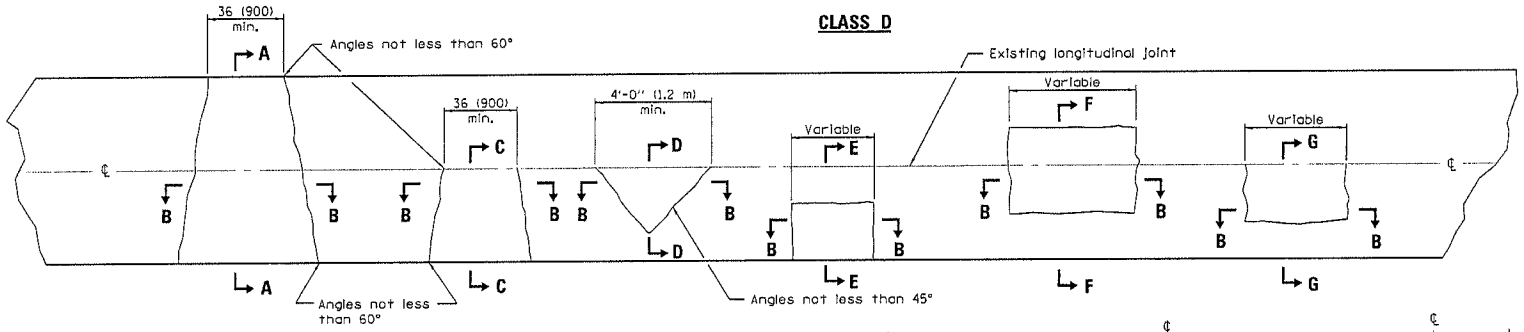

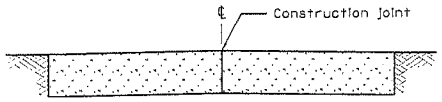

SECTION A–A
(Built in two operations)

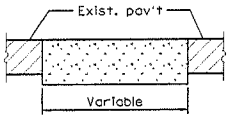

SECTION B–B

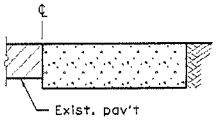

SECTION C–C

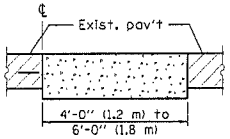

SECTION D–D

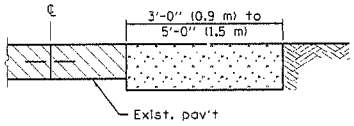

SECTION E–E

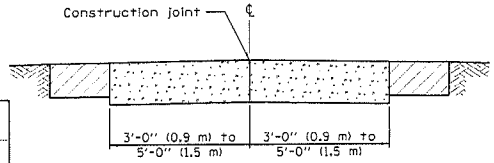

SECTION F–F
(Built in two operations)

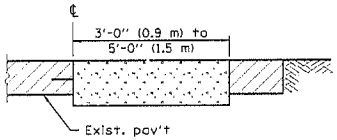

SECTION G–G

GENERAL NOTES

Existing tie bars shall be either cut or removed. Marginal bars shall be cut.

All dimensions are in inches (millimeters) unless otherwise shown.

DATE	REVISIONS
1-1-08	Switched units to
	English (metric).
1-1-07	Revised Note for
	Class C patches.

CLASS C and D PATCHES

STANDARD 442201-03

Illinois Department of Transportation

PASSED January 1, 2008
ENGINEER OF POLICY AND PROCEDURES

APPROVED January 1, 2008
ENGINEER OF DESIGN AND ENVIRONMENT

ISSUED 1-1-07

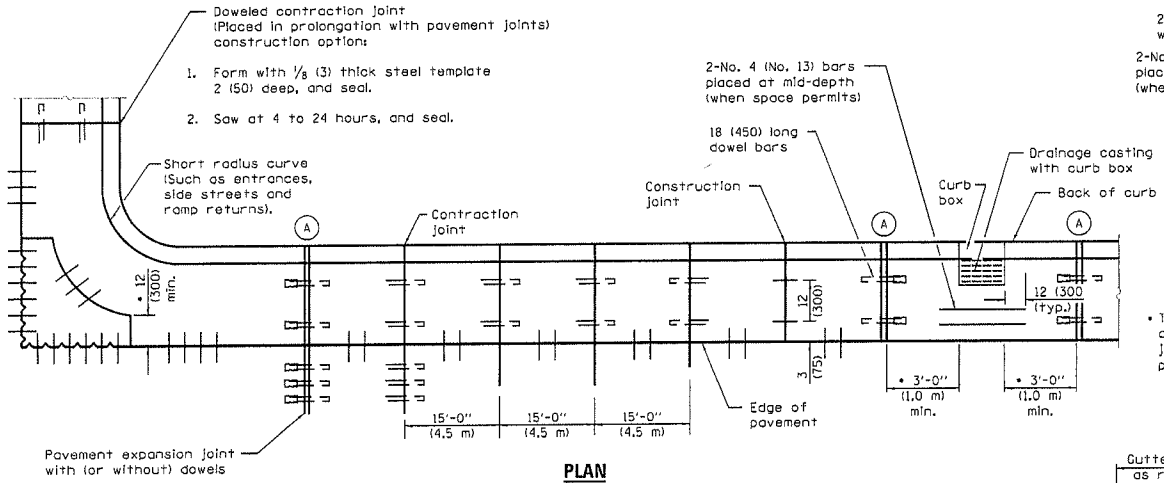

PLAN
ADJACENT TO PCC PAVEMENT OR PCC BASE COURSE

• This dimension shall be adjusted to align with joint on the adjacent pavement

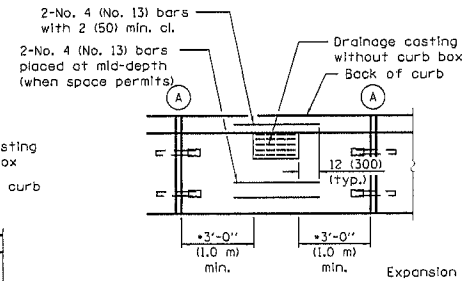

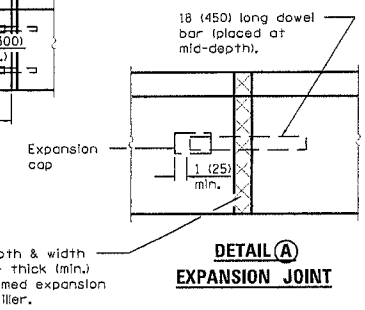

DETAIL (A)
EXPANSION JOINT

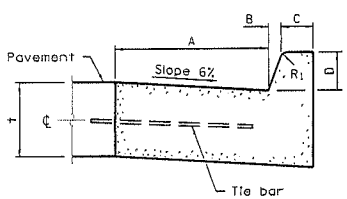

BARRIER CURB

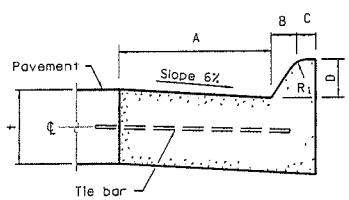

MOUNTABLE CURB

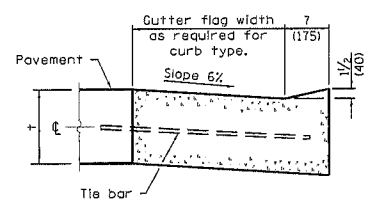

DEPRESSED CURB (TYPICAL)

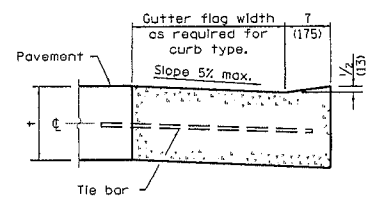

DEPRESSED CURB ADJACENT TO CURB RAMP ACCESSIBLE TO THE DISABLED

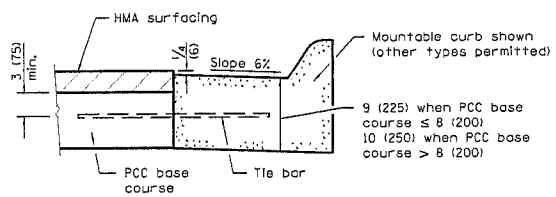

ADJACENT TO PCC BASE COURSE WITH HMA SURFACING

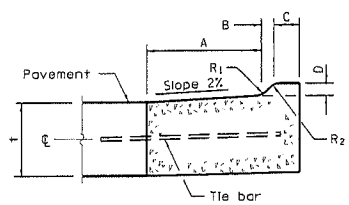

M–2.06 (M–5.15) and M–2.12 (M–5.30)

GENERAL NOTES

The bottom slope of combination curb and gutter constructed adjacent to pcc pavement shall be the same slope as the subbase or 6% when subbase is omitted.

t = Thickness of pavement.

Longitudinal joint tie bars shall be No. 6 (No. 19) at 24 (600) centers in accordance with details for longitudinal construction joint shown on Standard 420001.

A minimum clearance of 2 (50) between the end of the tie bar and the back of the curb shall be maintained.

The dowel bars shown in contraction joints will only be required for monolithic construction.

All dimensions are in inches (millimeters) unless otherwise shown.

TABLE OF DIMENSIONS
BARRIER CURB

TYPE	A	B	C	D	R_1
B-6.12 (B-15.3)	12 (300)	1 (25)	6 (150)	6 (150)	1 (25)
B-6.18 (B-15.45)	18 (450)	1 (25)	6 (150)	6 (150)	1 (25)
B-6.24 (B-15.60)	24 (600)	1 (25)	6 (150)	6 (150)	1 (25)
B-9.12 (B-22.30)	12 (300)	2 (50)	5 (125)	9 (225)	1 (25)
B-9.18 (B-22.45)	18 (450)	2 (50)	5 (125)	9 (225)	1 (25)
B-9.24 (B-22.60)	24 (600)	2 (50)	5 (125)	9 (225)	1 (25)

TABLE OF DIMENSIONS
MOUNTABLE CURB

TYPE	A	B	C	D	R_1	R_2
M-2.06 (M-5.15)	6 (150)	2 (50)	4 (100)	2 (50)	3 (75)	2 (50)
M-2.12 (M-5.30)	12 (300)	2 (50)	4 (100)	2 (50)	3 (75)	2 (50)
M-4.06 (M-10.15)	6 (150)	4 (100)	3 (75)	4 (100)	3 (75)	NA
M-4.12 (M-10.30)	12 (300)	4 (100)	3 (75)	4 (100)	3 (75)	NA
M-4.18 (M-10.45)	18 (450)	4 (100)	3 (75)	4 (100)	3 (75)	NA
M-4.24 (M-10.60)	24 (600)	4 (100)	3 (75)	4 (100)	3 (75)	NA
M-6.06 (M-15.15)	6 (150)	6 (150)	2 (50)	6 (150)	2 (50)	NA
M-6.12 (M-15.30)	12 (300)	6 (150)	2 (50)	6 (150)	2 (50)	NA
M-6.18 (M-15.45)	18 (450)	6 (150)	2 (50)	6 (150)	2 (50)	NA
M-6.24 (M-15.60)	24 (600)	6 (150)	2 (50)	6 (150)	2 (50)	NA

Illinois Department of Transportation
PASSED January 1, 2013
ENGINEER OF POLICY AND PROCEDURES
APPROVED January 1, 2013
ENGINEER OF DESIGN AND ENVIRONMENT
BBS CD-ROM (030513)

DATE	REVISIONS
1-1-13	Added general note
	regarding requirement
	for dowel bars.
1-1-09	Switched units to
	English (metric).

CONCRETE CURB TYPE B AND COMBINATION CONCRETE CURB AND GUTTER

(Sheet 1 of 2)

STANDARD 606001–05

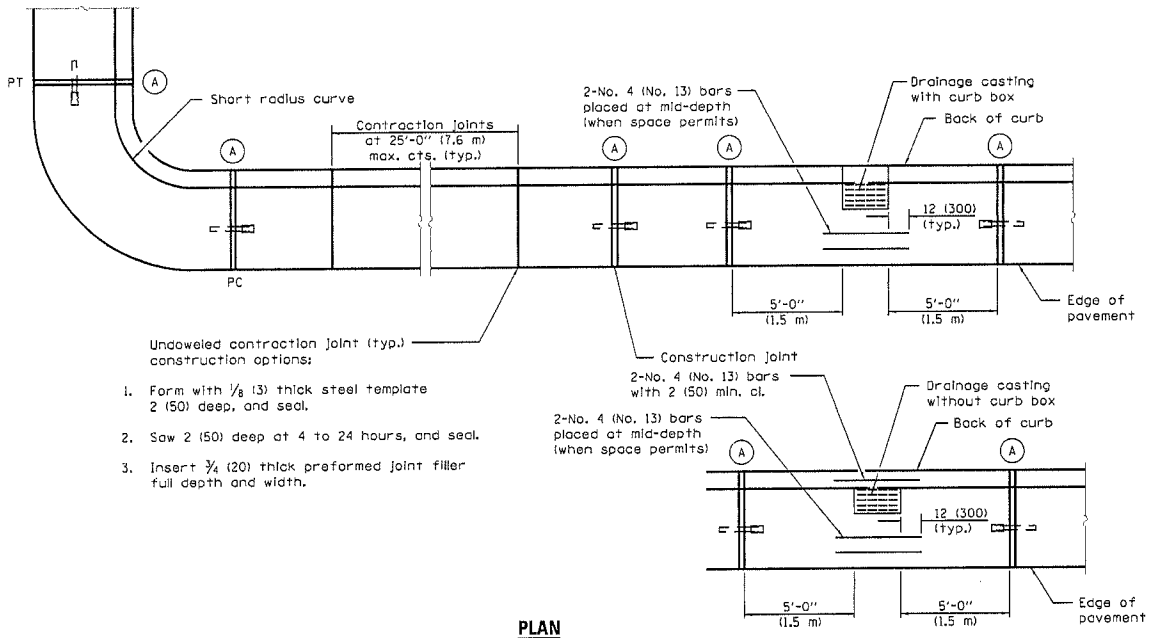

PLAN

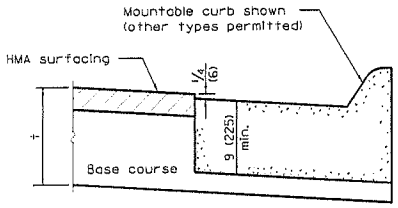

ON DISTURBED SUBGRADE

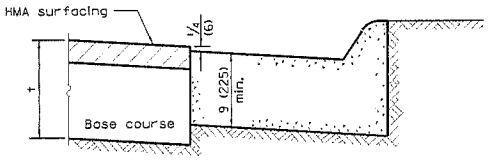

ON UNDISTURBED SUBGRADE

ADJACENT TO FLEXIBLE PAVEMENT

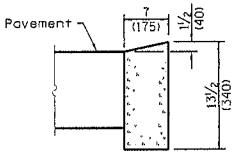

DEPRESSED CURB

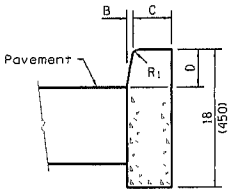

BARRIER CURB

ADJACENT TO FLEXIBLE PAVEMENT

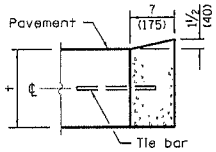

DEPRESSED CURB

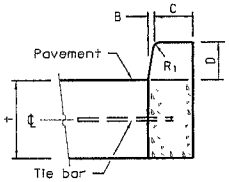

BARRIER CURB

ADJACENT TO PCC PAVEMENT OR PCC BASE COURSE

CONCRETE CURB TYPE B

Illinois Department of Transportation

PASSED January 1, 2013
ENGINEER OF POLICY AND PROCEDURES

APPROVED January 1, 2013
ENGINEER OF DESIGN AND ENVIRONMENT

13-1-1 (32754)

CONCRETE CURB TYPE B AND COMBINATION CONCRETE CURB AND GUTTER

(Sheet 2 of 2)

STANDARD 606001-05

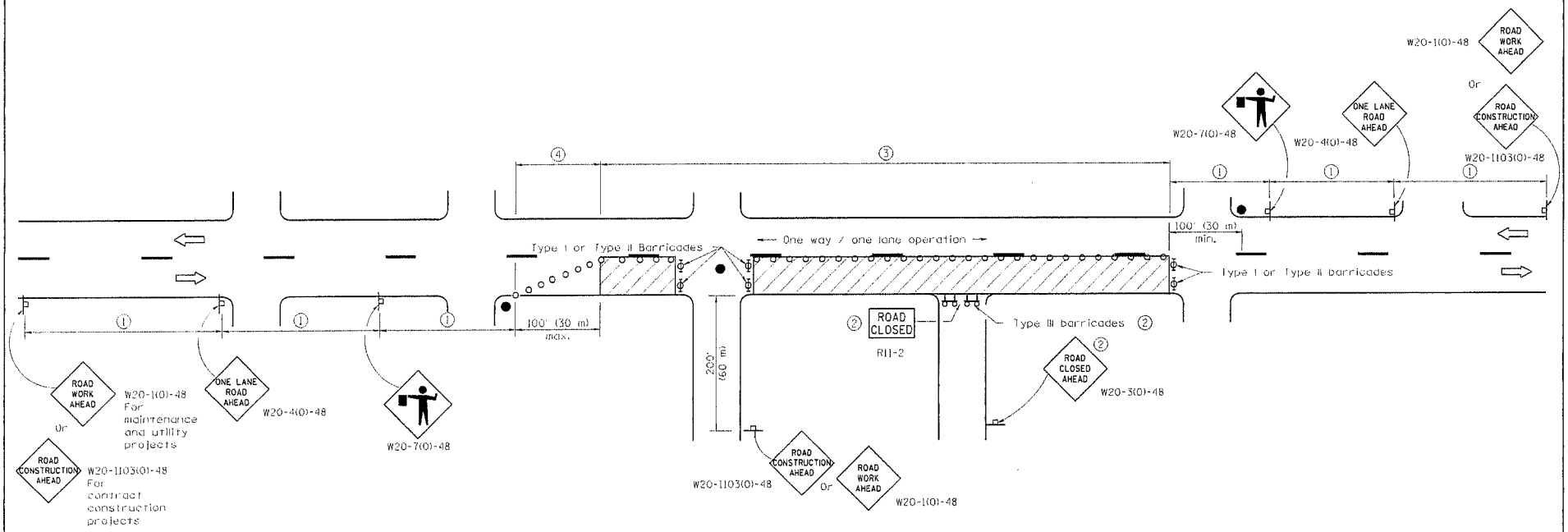

SIGN SPACING	
Posted Speed	Sign Spacing
55	500' (150 m)
50-45	350' (100 m)
<45	200' (60 m)

SYMBOLS

- Work area
- Cone, drum or barricade (not required for moving operations)
- Sign on portable or permanent support
- Flagger with traffic control sign
- Barricade or drum with flashing light
- Type III barricade with flashing lights

(1) Refer to SIGN SPACING TABLE for distances.

(2) For approved sideroad closures.

(3) Cones at 25' (8 m) centers for 250' (75 m). Additional cones may be placed at 50' (15 m) centers. When drums or Type I or Type II barricades are used, the interval between devices may be doubled.

(4) Cones, drums or barricades at 20' (6 m) centers.

GENERAL NOTES

This Standard is used where at any time, day or night, any vehicle, equipment, workers or their activities encroach on the pavement requiring the closure of one traffic lane in an urban area.

All dimensions are in inches (millimeters) unless otherwise shown.

Illinois Department of Transportation

APPROVED January 1, 2011
ENGINEER OF SAFETY ENGINEERING

APPROVED January 1, 2011
ENGINEER OF DESIGN AND ENVIRONMENT

ISTSCD 1-1-07

DATE	REVISIONS
1-1-11	Revised flagger sign.
1-1-09	Switched units to
	English (metric).
	Corrected sign No.'s.

URBAN LANE CLOSURE, 2L, 2W, UNDIVIDED

STANDARD 701501-06

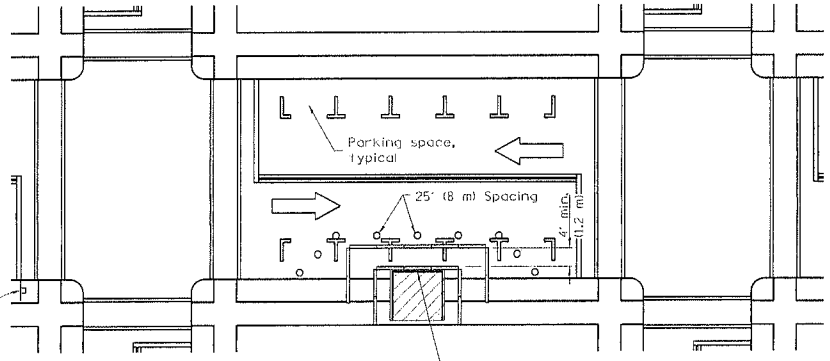

① ROAD CONSTRUCTION AHEAD — W20-1103(0)-48 for contract construction projects

Or

① ROAD WORK AHEAD — W20-1(0)-48 for maintenance and utility projects

SIDEWALK DIVERSION

① Omit whenever duplicated by road work traffic control.

SYMBOLS

- Work area
- Sign on portable or permanent support
- Barricade or drum
- Cone, drum or barricade
- Type III barricade
- Detectable pedestrian channelizing barricade

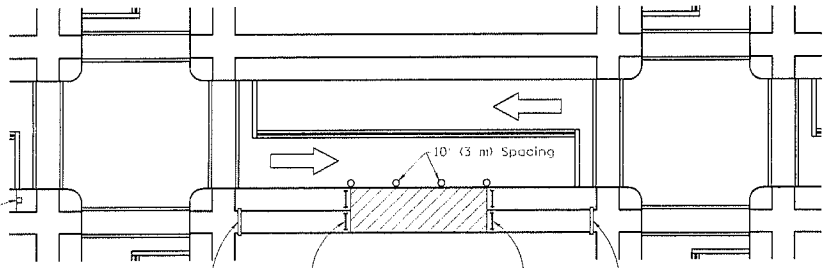

① ROAD CONSTRUCTION AHEAD — W20-1103(0)-48 for contract construction projects

Or

① ROAD WORK AHEAD — W20-1(0)-48 for maintenance and utility projects

SIDEWALK CLOSED ← USE OTHER SIDE — R11-1102-2430

SIDEWALK CLOSED — R11-1101-2418

SIDEWALK CLOSED → USE OTHER SIDE — R11-1102-2430

SIDEWALK CLOSURE

GENERAL NOTES

This Standard is used where, at any time, pedestrian traffic must be rerouted due to work being performed.

This Standard must be used in conjunction with other Traffic Control & Protection Standards when roadway traffic is affected.

Temporary facilities shall be detectable and accessible.

The temporary pedestrian facilities shall be provided on the same side of the closed facilities whenever possible.

The SIDEWALK CLOSED / USE OTHER SIDE sign shall be placed at the nearest crosswalk or intersection to each end of the closure. Where the closure occurs at a corner, the signs shall be erected on the corners across the street from the closure. The SIDEWALK CLOSED signs shall be used at the ends of the actual closures.

Type III barricades and R11-2-4830 signs shall be positioned as shown in "ROAD CLOSED TO ALL TRAFFIC" detail on Standard 701901.

All dimensions are in inches (millimeters) unless otherwise shown.

Illinois Department of Transportation

APPROVED January 1, 2012
ENGINEER OF SAFETY ENGINEERING

APPROVED January 1, 2012
ENGINEER OF DESIGN AND ENVIRONMENT

ISSUED 1-1-97

DATE	REVISIONS
1-1-12	Added SIDEWALK DIVERSION.
	Modified appearance of
	plan views. Renamed Std.
1-1-09	Switched units to
	English (metric),
	702001 to 701901.

SIDEWALK, CORNER OR CROSSWALK CLOSURE

(Sheet 1 of 2)

STANDARD 701801-05

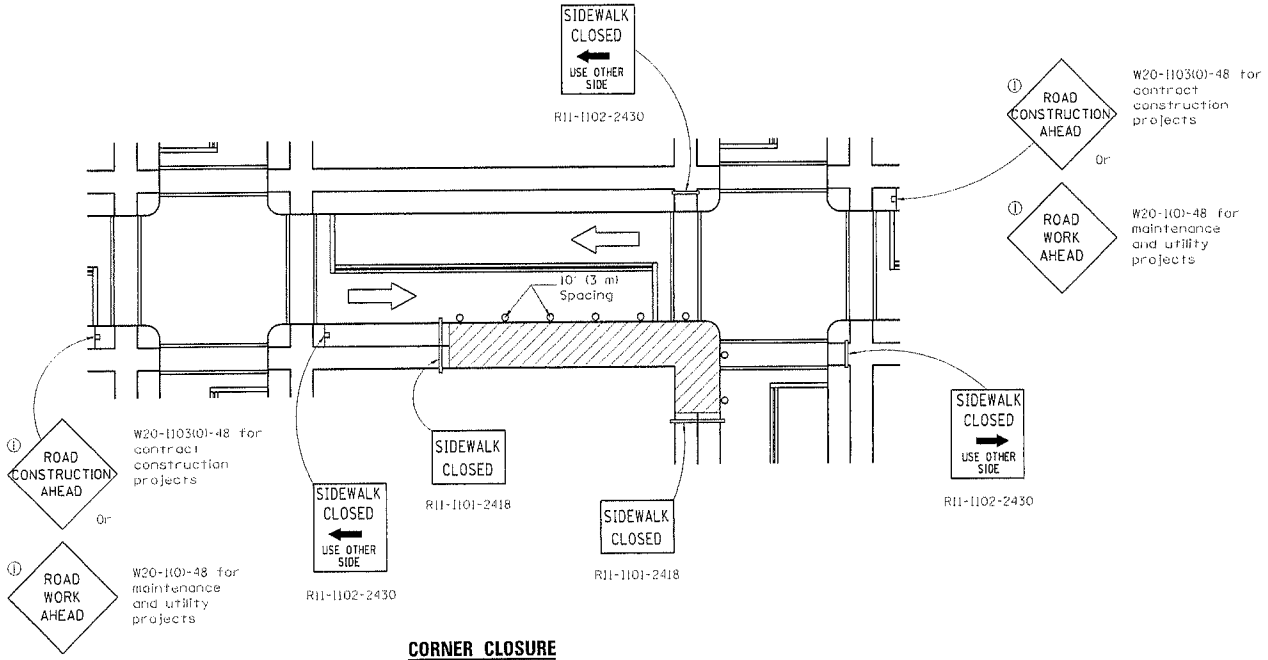

CORNER CLOSURE

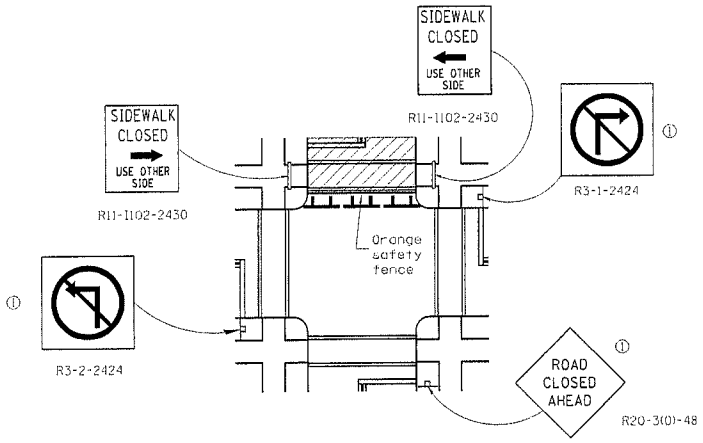

CROSSWALK CLOSURE

Illinois Department of Transportation

APPROVED January 1, 2012
ENGINEER OF SAFETY ENGINEERING

APPROVED January 1, 2012
ENGINEER OF DESIGN AND ENVIRONMENT

ISSUED 1-1-97

SIDEWALK, CORNER OR CROSSWALK CLOSURE

(Sheet 2 of 2)

STANDARD 701801-05

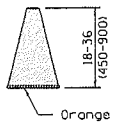

CONE

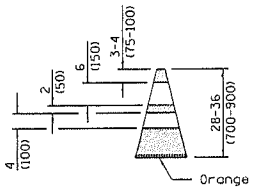

REFLECTORIZED CONE

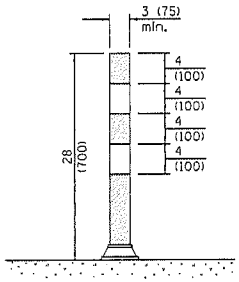

FLEXIBLE DELINEATOR

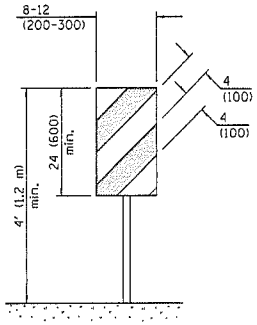

VERTICAL PANEL
POST MOUNTED

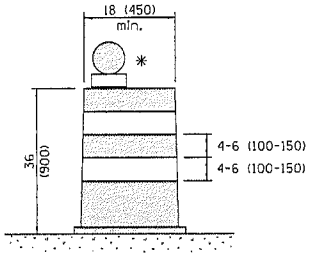

DRUM

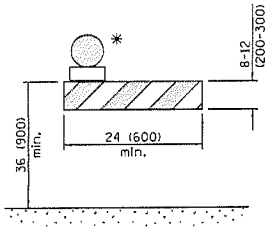

TYPE I BARRICADE

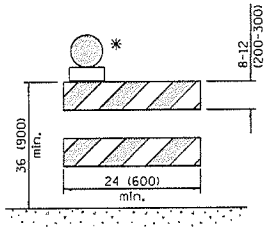

TYPE II BARRICADE

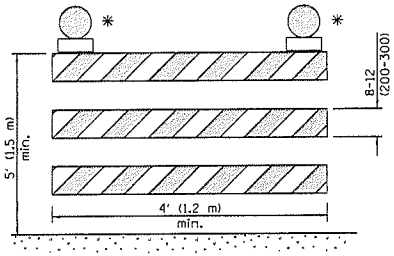

TYPE III BARRICADE

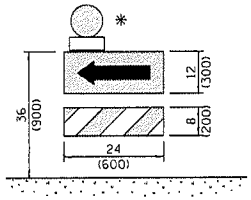

DIRECTION INDICATOR BARRICADE

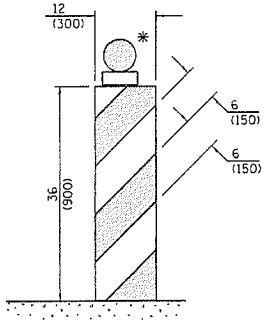

VERTICAL BARRICADE

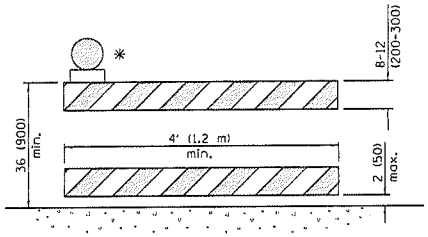

DETECTABLE PEDESTRIAN CHANNELIZING BARRICADE

* Warning lights (If required)

GENERAL NOTES

All heights shown shall be measured above the pavement surface.

All dimensions are in inches (millimeters) unless otherwise shown.

DATE	REVISIONS
1-1-14	Modified flagger sign height.
	Added highway construction
	speed zone signs.
1-1-12	Added DETECTABLE PEDESTRIAN
	CHANNELIZING BARRICADE.

TRAFFIC CONTROL DEVICES

(Sheet 1 of 3)

STANDARD 701901-03

Illinois Department of Transportation

APPROVED January 1, 2014
ENGINEER OF OPERATIONS

APPROVED January 1, 2014
ENGINEER OF DESIGN AND ENVIRONMENT

BDS 551
36-1-1

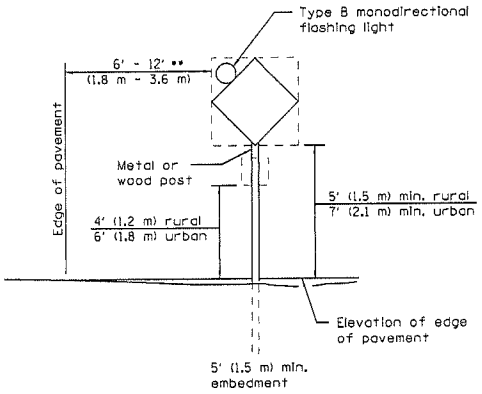

POST MOUNTED SIGNS

** When curb or paved shoulder are present this dimension shall be 24 (600) to the face of curb or 6' (1.8 m) to the outside edge of the paved shoulder.

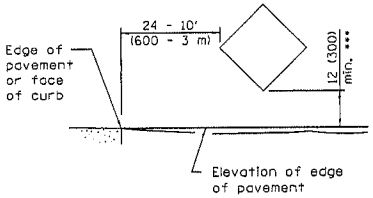

SIGNS ON TEMPORARY SUPPORTS

*** When work operations exceed four days, this dimension shall be 5' (1.5 m) min. If located behind other devices, the height shall be sufficient to be seen completely above the devices.

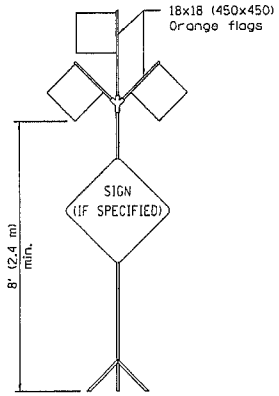

HIGH LEVEL WARNING DEVICE

ROAD CONSTRUCTION NEXT X MILES	END CONSTRUCTION
G20-1(0)-6036	G20-2a(0)-6024

This signing is required for all projects 2 miles (3200 m) or more in length.

ROAD CONSTRUCTION NEXT X MILES sign shall be placed 500' (150 m) in advance of project limits.

END CONSTRUCTION sign shall be erected at the end of the job unless another job is within 2 miles (3200 m).

Dual sign displays shall be utilized on multi-lane highways.

WORK LIMIT SIGNING

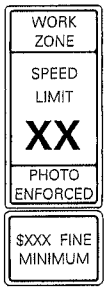

W21-1115(0)-3618

R2-1-3648

R10-1108p-3618

R2-1106p-3618

Sign assembly as shown on Standards or as allowed by District Operations.

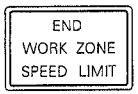

G20-1103(0)-3660

This sign shall be used when the above sign assembly is used.

HIGHWAY CONSTRUCTION SPEED ZONE SIGNS

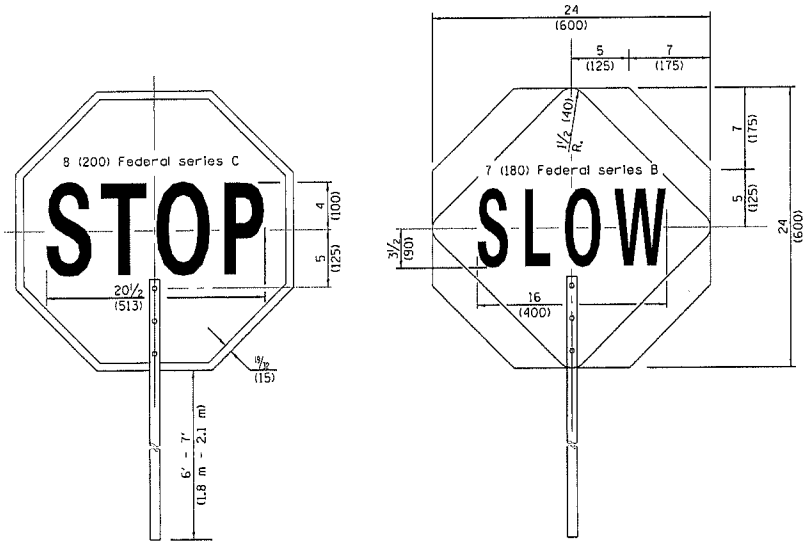

FRONT SIDE

REVERSE SIDE

FLAGGER TRAFFIC CONTROL SIGN

Illinois Department of Transportation

APPROVED January 1, 2014
ENGINEER OF OPERATIONS

APPROVED January 1, 2014
ENGINEER OF DESIGN AND ENVIRONMENT

ISSUED 1-1-97

TRAFFIC CONTROL DEVICES

(Sheet 2 of 3)

STANDARD 701901-03

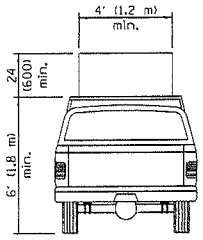

TYPE A
ROOF
MOUNTED

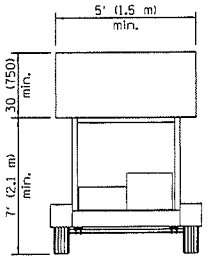

TYPE B
ROOF OR TRAILER
MOUNTED

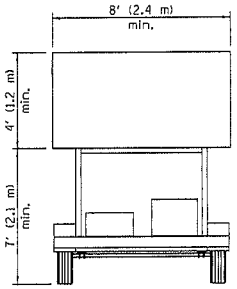

TYPE C
TRAILER
MOUNTED

ARROW BOARDS

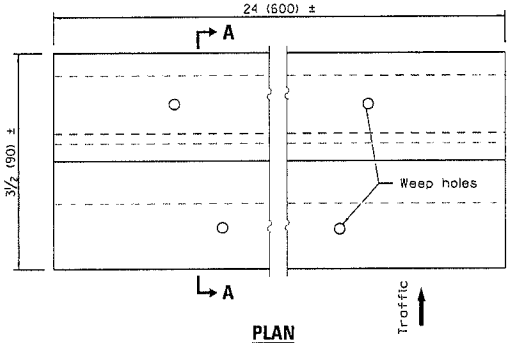

PLAN

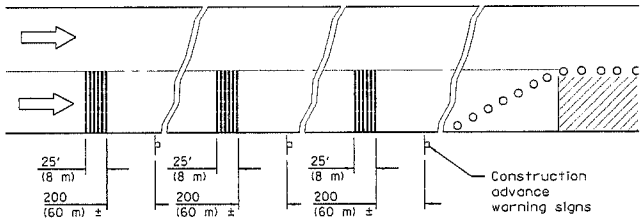

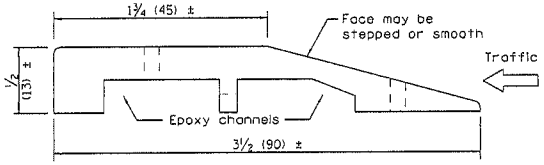

SECTION A–A

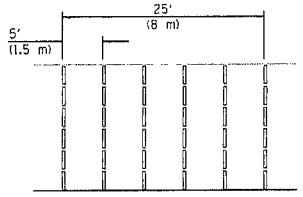

TYPICAL INSTALLATION

TEMPORARY RUMBLE STRIPS

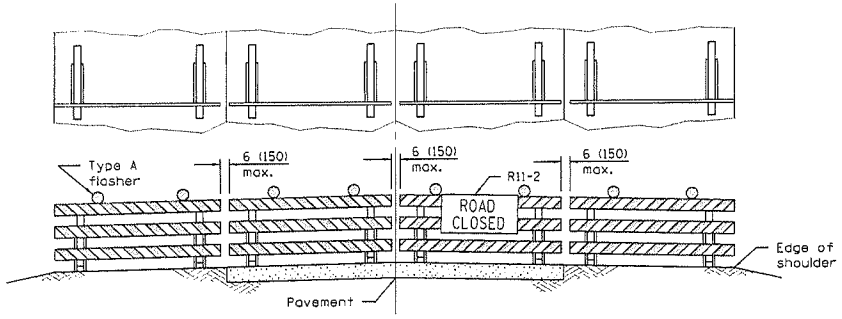

ROAD CLOSED TO ALL TRAFFIC

Reflectorized striping may be omitted on the back side of the barricades. If a Type III barricade with an attached sign panel which meets NCHRP 350 is not available, the sign may be mounted on an NCHRP 350 temporary sign support directly in front of the barricade.

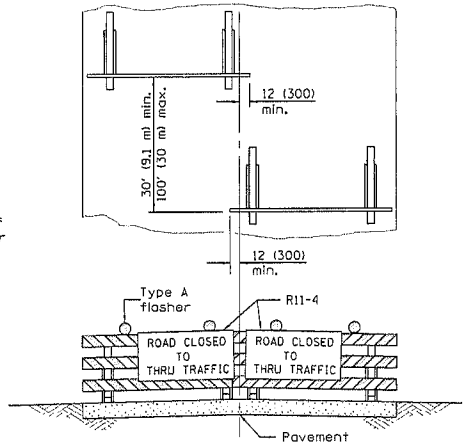

ROAD CLOSED TO THRU TRAFFIC

Reflectorized striping shall appear on both sides of the barricades. If a Type III barricade with an attached sign panel which meets NCHRP 350 is not available, the signs may be mounted on NCHRP 350 temporary sign supports directly in front of the barricade.

TYPICAL APPLICATIONS OF
TYPE III BARRICADES CLOSING A ROAD

Illinois Department of Transportation

APPROVED January 1, 2014
ENGINEER OF OPERATIONS

APPROVED January 1, 2014
ENGINEER OF DESIGN AND ENVIRONMENT

ISSUED 1-1-14

TRAFFIC CONTROL DEVICES

(Sheet 3 of 3)

STANDARD 701901–03

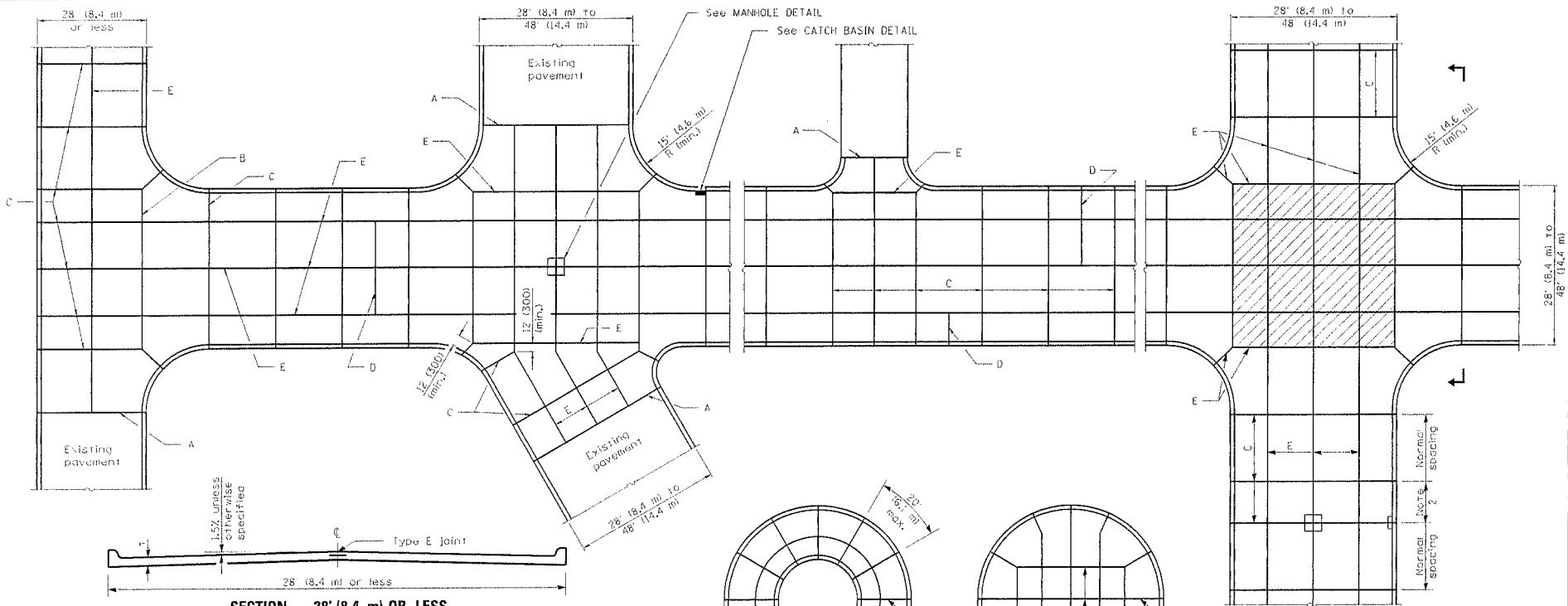

SECTION – 28' (8.4 m) OR LESS

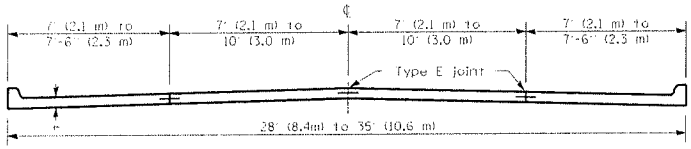

SECTION – 28' (8.4 m) TO 35' (10.6 m) WIDTH

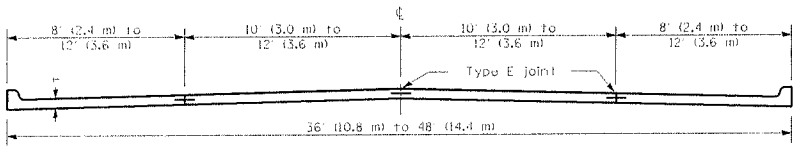

SECTION – 36' (10.8 m) TO 48' (14.4 m) WIDTH

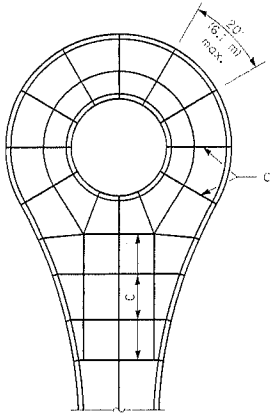

CUL DE SAC OPEN CENTER

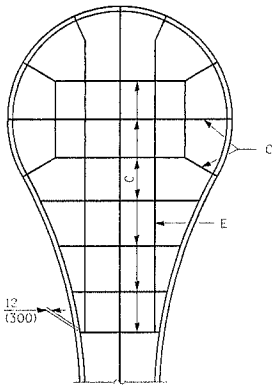

CUL DE SAC FULLY PAVED

t = See typical cross section on plans for thickness

All dimensions are in inches (millimeters) unless otherwise shown.

Illinois Department of Transportation

APPROVED January 1, 2009
ENGINEER OF LOCAL ROADS AND STREETS

APPROVED January 1, 2009
ENGINEER OF DESIGN AND ENVIRONMENT

BLR 10-6 (GRSS)

DATE	REVISIONS
1-1-09	Switched units to
	English (metric).
8-1-05	Corrected manhole and
	catch basin notes on
	Sheet 1.

PCC PAVEMENT SPECIAL (NONREINFORCED)

(Sheet 1 of 2)

STANDARD B.L.R. 10-6

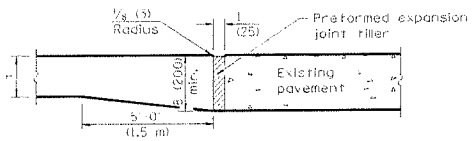

TYPE A
EXPANSION JOINT

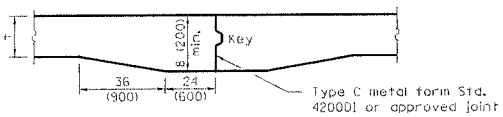

TYPE B
KEYED JOINT

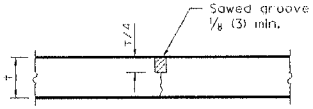

TYPE C
SAWED TRANSVERSE JOINT

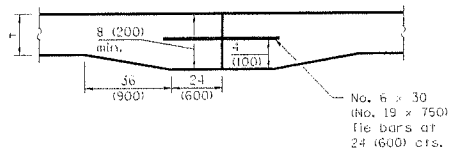

TYPE D
TIED TRANSVERSE CONSTRUCTION JOINT

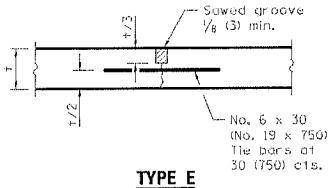

TYPE E
SAWED LONGITUDINAL JOINT

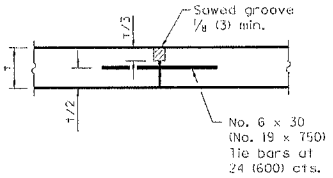

TYPE E
LONGITUDINAL CONSTRUCTION JOINT

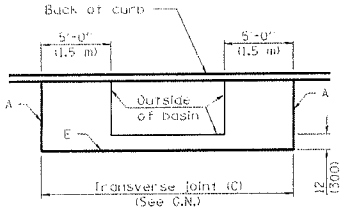

CATCH BASIN DETAIL

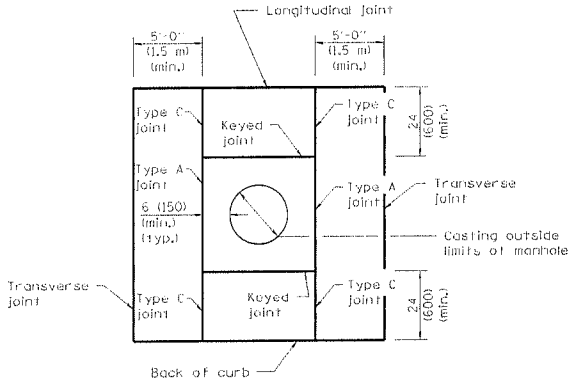

MANHOLE DETAIL
Showing Joint types

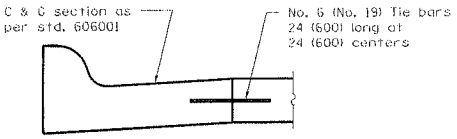

COMB. CURB & GUTTER DETAIL
Alt. const. see C.N.

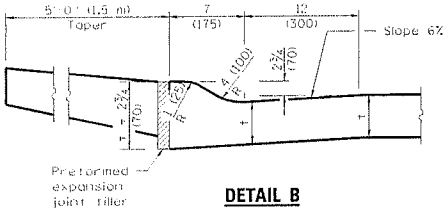

DETAIL B

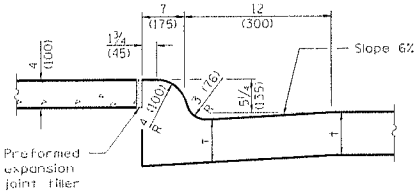

DETAIL A

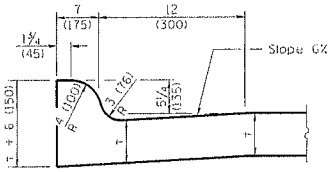

INTEGRAL CURB
See DETAIL A for crosswalks and DETAIL B for driveways.

GENERAL NOTES

All catch basins shall be separated from the pavement and curb by boxing out as shown in the detail. Manhole castings within the pavement limits shall be boxed in a like manner except when telescoping type castings are used.

When a joint falls within 5 ft. (1.5 m) of or contacts basins, manholes, or other structures, shorten one or more panels either side of opening to permit joint to fall at the corners of the box out.

When specified, roundouts as shown on Standard 420111 shall be used in lieu of the manhole detail shown herein.

All transverse joints must extend through curbs and be continuous across pavement, except tied transverse construction joints. Expansion joints will be required as shown on the plans.

When specified, the pavement structure thickness at intersections shall be increased. This requirement generally will occur when the design traffic through the intersection exceeds the typical design of the pavement structure either side of the intersection.

Joints shall be sawed to a depth of t/4 for transverse joints and t/3 for longitudinal joints. Saw joints shall be sealed with material meeting the requirements of Section 1050 of the Standard Specifications.

This alternate construction is at the Contractor's option and shall be constructed in accordance with Section 606 of the Standard Specifications. The combination concrete curb and gutter shall be measured in place and the area computed in sq. yards (sq. meters). This work will be paid for at the contract unit price per sq. yards (sq. meters) for portland cement concrete pavement special with integral curb of the thickness specified and shall include all materials and labor.

Transverse joint spacing shall not exceed 15 ft. (4.6 m).

Construct TYPE D tied transverse construction joint when construction joint does not fall at a TYPE C sawed transverse joint.

Illinois Department of Transportation

APPROVED January 1, 2009
ENGINEER OF LOCAL ROADS AND STREETS

APPROVED January 1, 2009
ENGINEER OF DESIGN AND ENVIRONMENT

BLR 11-1 (07155)

PCC PAVEMENT SPECIAL (NONREINFORCED)

(Sheet 2 of 2)

STANDARD B.L.R. 10-6

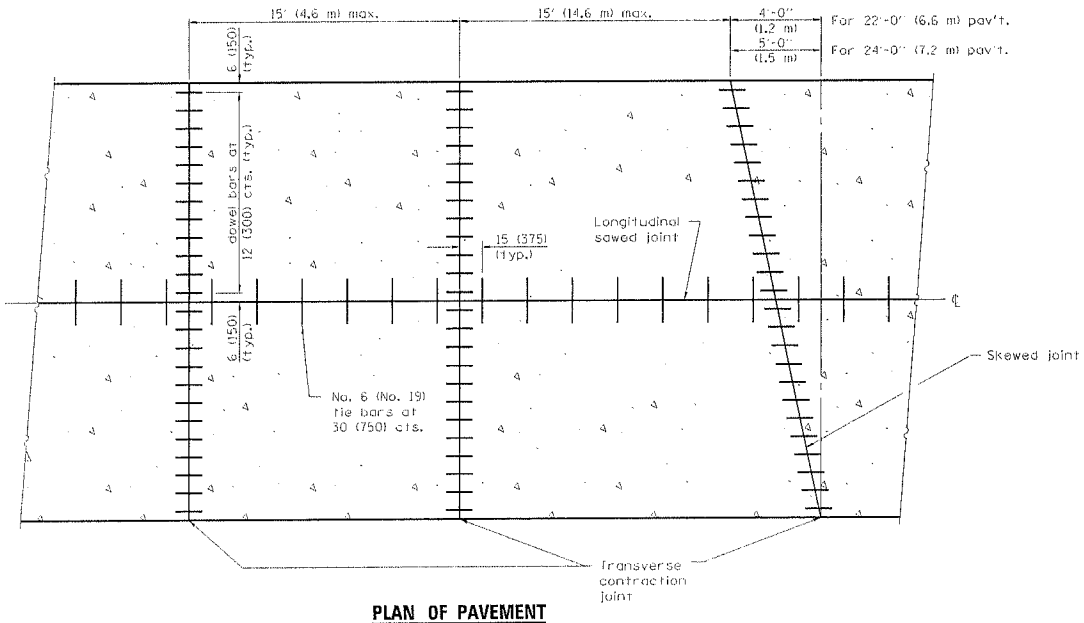

PLAN OF PAVEMENT

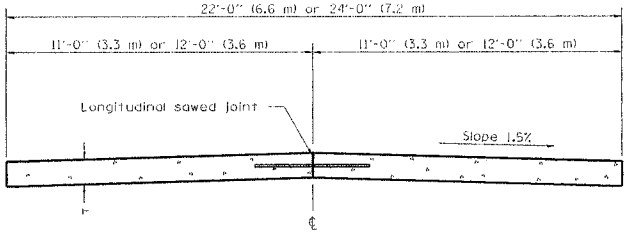

CROSS SECTION OF PAVEMENT

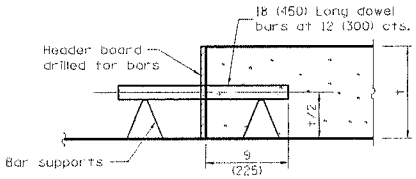

TRANSVERSE CONSTRUCTION JOINT

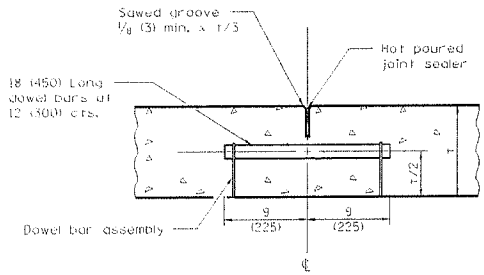

TRANSVERSE CONTRACTION JOINT

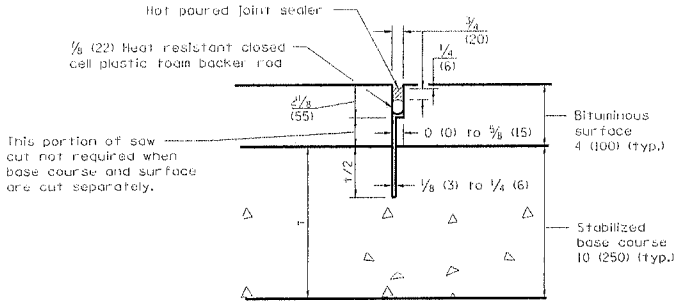

TRANSVERSE CONTRACTION JOINT

(For CAM, CFA and LFA Base Course Mixtures)

GENERAL NOTES

See Standard 420001 for details of Transverse Expansion Joints, Longitudinal Sawed Joints and Longitudinal Construction Joints.

Skewed joints shall be used when specified by Special Provisions.

t = Pavement Thickness (See Typical Cross Section)

All dimensions are in inches (millimeters) unless otherwise shown.

DOWEL BAR TABLE

PAVEMENT THICKNESS	DOWEL BAR DIAMETER
8 (200) or greater	1½ (38)
7 (175) thru 7.99 (199)	1¼ (32)
Less than 7 (175)	1 (25)

DATE	REVISIONS
1-1-09	Switched units to English (metric).
8-1-05	Deleted sheet 2 and minor corrections to remaining joint details.

PORTLAND CEMENT CONCRETE PAVEMENT (NONREINFORCED)

STANDARD B.L.R. 14-10

Illinois Department of Transportation

APPROVED January 1, 2009
ENGINEER OF LOCAL ROADS AND STREETS

APPROVED January 1, 2009
ENGINEER OF DESIGN AND ENVIRONMENT

A-11-11 63151

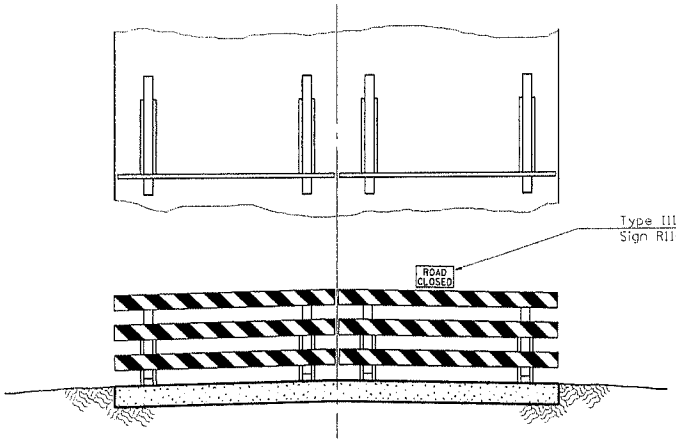

Resident traffic and day labor force's equipment to use road shoulder for passing barricade.

Type III Barricades with Standard Sign R11-2 or R11-4 mounted as shown.

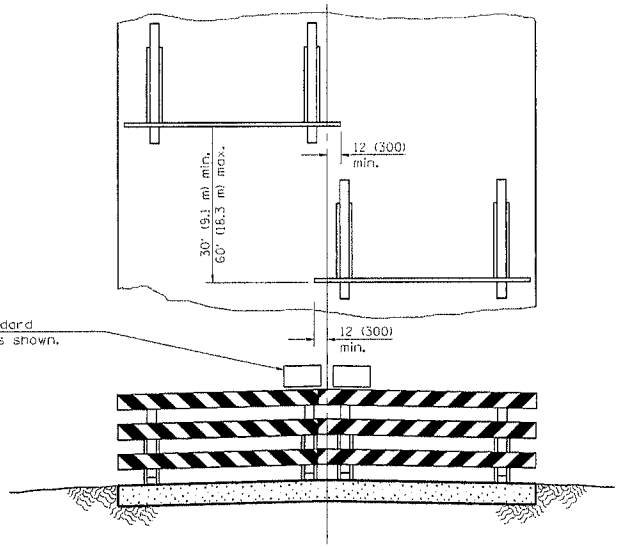

Use when shoulders are too narrow for passage of traffic.

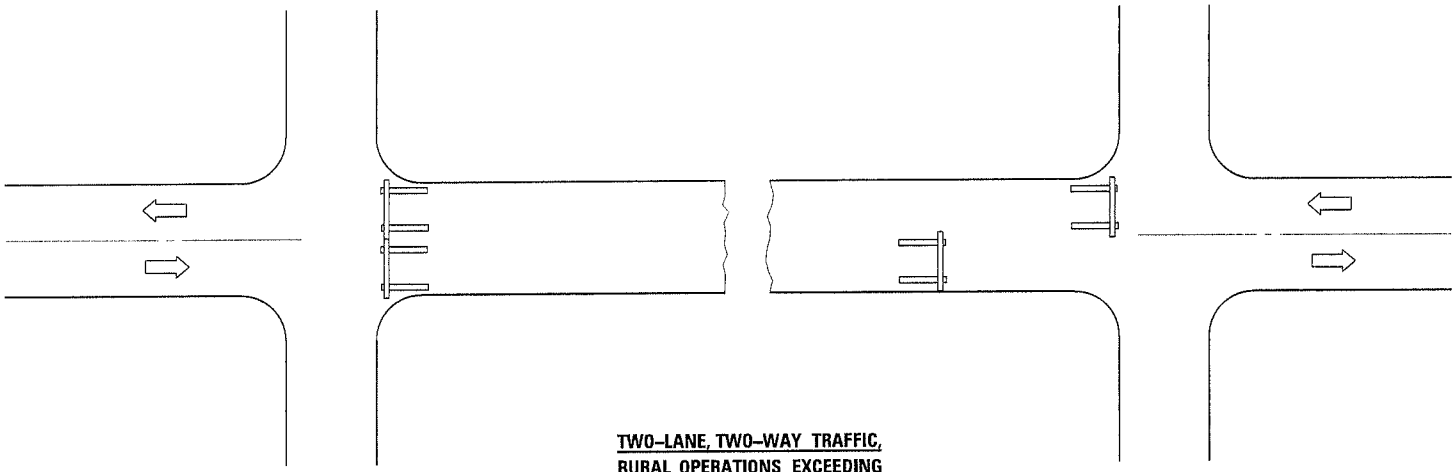

TWO-LANE, TWO-WAY TRAFFIC, RURAL OPERATIONS EXCEEDING ONE DAYLIGHT PERIOD

GENERAL NOTES

Type III barricades to be width of pavement only.

Reflectorized striping shall appear on both sides of barricades. Barricades shall be positioned so that stripes slope downward toward the side on which traffic is to pass.

Although not shown, advance warning signs with minimum dimensions of 36x36 (900x900) and black legends on orange reflectorized backgrounds shall be utilized where needed.

This case is for use on rural local roads where the local authority considers this protection to be appropriate for the specific job conditions.

All dimensions are in inches (millimeters) unless otherwise shown.

Illinois Department of Transportation

APPROVED January 1, 2009
ENGINEER OF LOCAL ROADS AND STREETS

APPROVED January 1, 2009
ENGINEER OF DESIGN AND ENVIRONMENT

ISSUED 1-1-97

DATE	REVISIONS
1-1-09	Switched units to English (metric).
1-1-98	Rev. "R11-1" to "R11-4". Rev. 4th General Note.

TRAFFIC CONTROL DEVICES – DAY LABOR CONSTRUCTION

STANDARD B.L.R. 17-4

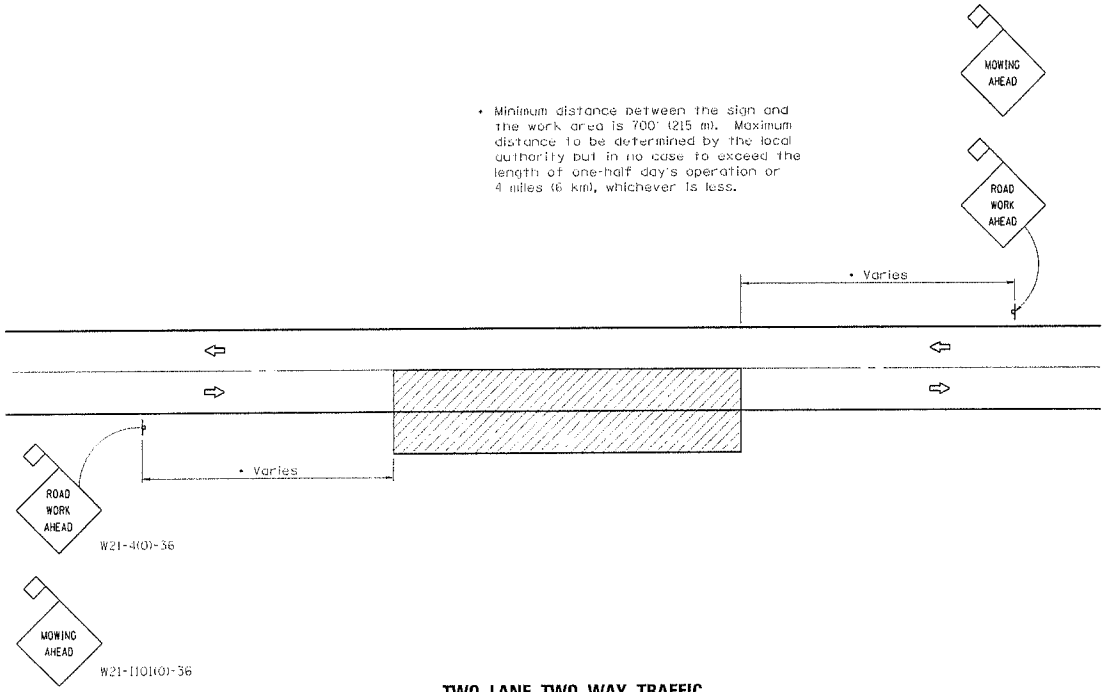

TWO-LANE, TWO-WAY TRAFFIC
RURAL OPERATIONS
DAY OPERATIONS ONLY

SYMBOLS

Work area

Sign with 18x18 (450x450) min. orange flag attached.

TYPICAL APPLICATIONS

MOWING
SPREADING AGGREGATE
WEED SPRAYING
SURFACE MAINTENANCE
BITUMINOUS RESURFACING
CRACK POURING
SHOULDER REPAIR
CLEANING DITCHES

GENERAL NOTES

Maintenance operations shall be confined to one traffic lane, leaving the opposite lane open to traffic. At least 500' (150 m) of both traffic lanes shall be available for traffic movement between work areas at intervals not greater than 1000' (300 m).

When operations are on the pavement and stationary or moving at a speed less than 4 mph (6 kph), a ONE LANE AHEAD, or other appropriate sign, shall be installed in each direction between the ROAD WORK AHEAD sign and the work area. The distance between this sign and the work area shall be a minimum of 400' (120 m) but in no case to exceed the length of one-half day's operation or 4 miles (6 km), whichever is less. The distance between the two signs shall be approximately 400' (120 m).

All signs are to be removed at completion of the day's operation.

Any unattended obstacle, excavation, or pavement drop off greater than 3 (75) in the work area shall be protected by Type I or Type II barricades with flashing lights.

Longitudinal dimensions may be adjusted slightly to fit field conditions.

All vehicles, equipment, men, and their activities are restricted at all times to one side of the pavement.

Flashing lights or rotating beacons are required for all maintenance vehicles while in operation.

Applicable operations illustrated in Standard 701301 may be used when operations do not exceed 15 minutes on the pavement or 60 minutes on the shoulder respectively.

All warning signs shall have minimum dimensions of 36x36 (900x900) and have black legend on an orange reflectorized background.

When fluorescent signs are used, orange flags are not required.

This case is for use on rural local roads where the local authority considers this protection to be appropriate for the specific job conditions.

All dimensions are in inches (millimeters) unless otherwise shown.

DATE	REVISIONS
1-1-09	Switched units to
	English (metric). Moved
	one General Note.
1-1-99	Delete ROW Line.

TRAFFIC CONTROL DEVICES– DAY LABOR MAINTENANCE

STANDARD B.L.R. 18-5

Illinois Department of Transportation

APPROVED January 1, 2009
ENGINEER OF LOCAL ROADS AND STREETS
APPROVED January 1, 2009
ENGINEER OF DESIGN AND ENVIRONMENT

BLR 18-1-1 (GPTSS) 1-1-97

TOTALS (without Supplemental)

No.	Description	Unit	QTY
1	Remove & Replace Fire Hydrant, Aux. Valve Box & Install Stabilizer	EA	4
2	Remove & Replace 6" Auxilliary Valve, 5-1/4" Box & Install Stabilizer	EA	1
3	Remove & Replace B-Box in Driveway or Sidewalk	EA	4
4	Reset 5-1/4" Auxiliary Valve Box & Install Stabilizer	EA	1
5	Replace 5-1/4" Auxiliary Valve Box & Install Stabilizer	EA	12
6	Replace 5-1/4" Valve Box in Pavement & Install Stabilizer	EA	1
7	Replace Valve Box with Valve Vault (I.D.-48")	EA	1
8	Reset Valve Vault Frame - in Sidewalk	EA	1
9	Remove & Replace Frame & Lid in Pavement	EA	10
10	Remove & Replace 6" Valve & Valve Vault (I.D.-48")	EA	3
11	Remove 12" Valve & Valve Vault (I.D.-48") - Cut Main & Cap Tee	EA	1
12	Lower 4" Class 52 Ductile Iron Water Main	LF	24
13	10" Ductile Iron Water Main - Casing Pipe	LS	1
14	Remove & Replace Sanitary Manhole (I.D.-48")	EA	4
15	Sanitary Manhole Chimney Seal	EA	4
16	Remove & Replace Frame & Lid in Pavement	EA	4
17	Sanitary Sewer Pipe Removal and Replacement - 8"	LF	32
18	Sanitary Sewer Pipe Removal and Replacement - 10"	LF	20
19	Sanitary Manholes to be Reconstructed	EA	1
20	Sanitary Sewer Service Removal and Replacement 6"	LF	46
21	Remove and Replace Storm Manhole (I.D.-48"), w/ 48" Dia. Manhole	EA	6
22	Remove and Replace Storm Structure (I.D.-48"), w/ 36" Dia. Catch Basin	EA	1
23	Remove and Replace Storm Structure (I.D.-36"), w/ 36" Dia. Catch Basin	EA	6
24	Remove and Replace Storm Structure (I.D.-24"), w/ 48" Dia. Manhole	EA	1
25	Remove and Replace Catch Basin, Type "C" - 24" Dia. w/ 2' Sump	EA	8
26	Abandon Existing Storm Structure	EA	2
27	48" Dia. Storm Manhole in Pavement	EA	3
28	48" Dia. Storm Manhole in Parkway	EA	1
29	Remove and Replace Inlet, Type "A" - 24" Dia.	EA	10
30	Inlet, Type "A" - 24" Dia.	EA	1
31	Reset Manhole Frame in Pavement	EA	9
32	Reset Frame in Curb	EA	17
33	Remove & Replace Frame & Lid in Curb	EA	1
34	Remove & Replace Frame & Lid in Pavement	EA	2
35	Remove & Replace Frame in Parkway	EA	1
36	Storm Sewer Service, PVC SDR 26, 6"	LF	131
37	Storm Sewer Pipe, PVC SDR 21 - 10"	LF	66
38	Storm Sewer Pipe, PVC SDR 26, Removal and Replacement - 10"	LF	20
39	Storm Sewer Pipe, PVC SDR 26, Removal and Replacement - 12"	LF	10
40	Storm Sewer Pipe, PVC SDR 21, Removal and Replacement - 10"	LF	25
41	Storm Sewer Pipe, PVC SDR 21, Removal and Replacement - 12"	LF	69
42	Storm Sewer Pipe, PVC SDR 26 - 12"	LF	176
43	Storm Sewer Pipe, PVC SDR 21 - 12"	LF	807
44	Storm Sewer Pipe, RCP Class 3 Removal and Replacement- 12"	LF	10
45	Storm Sewer Pipe, RCP Class 4 Removal and Replacement- 10"	LF	12
46	Storm Sewer Pipe, RCP Class 4 Removal and Replacement- 12"	LF	48
47	Storm Sewer Pipe, RCP Class 3 Removal and Replacement - 15"	LF	130
48	Storm Sewer Pipe, RCP Class 4 Removal and Replacement - 15"	LF	275
49	Abandon Storm Sewer Pipe - Fill with Flowable Fill	CY	27
50	Storm Sewer Pipe Removal	LF	80
	TOTAL		

Cambridge Drive - S. Tyler Road to Cumberland Green Dr.

No.	Description	Unit	QTY
1	Remove & Replace Fire Hydrant, Aux. Valve Box & Install Stabilizer	EA	
2	Remove & Replace 6" Auxilliary Valve, 5-1/4" Box & Install Stabilizer	EA	
3	Remove & Replace B-Box in Driveway or Sidewalk	EA	
4	Reset 5-1/4" Auxiliary Valve Box & Install Stabilizer	EA	
5	Replace 5-1/4" Auxiliary Valve Box & Install Stabilizer	EA	3
6	Replace 5-1/4" Valve Box in Pavement & Install Stabilizer	EA	
7	Replace Valve Box with Valve Vault (I.D.-48")	EA	
8	Reset Valve Vault Frame - in Sidewalk	EA	
9	Remove & Replace Frame & Lid in Pavement	EA	
10	Remove & Replace 6" Valve & Valve Vault (I.D.-48")	EA	
11	Remove 12" Valve & Valve Vault (I.D.-48") - Cut Main & Cap Tee	EA	
12	Lower 4" Class 52 Ductile Iron Water Main	LF	
13	10" Ductile Iron Water Main - Casing Pipe	LS	
14	Remove & Replace Sanitary Manhole (I.D.-48")	EA	
15	Sanitary Manhole Chimney Seal	EA	
16	Remove & Replace Frame & Lid in Pavement	EA	
17	Sanitary Sewer Pipe Removal and Replacement - 8"	LF	
18	Sanitary Sewer Pipe Removal and Replacement - 10"	LF	
19	Sanitary Manholes to be Reconstructed	EA	
20	Sanitary Sewer Service Removal and Replacement 6"	LF	
21	Remove and Replace Storm Manhole (I.D.-48"), w/ 48" Dia. Manhole	EA	
22	Remove and Replace Storm Structure (I.D.-48"), w/ 36" Dia. Catch Basin	EA	
23	Remove and Replace Storm Structure (I.D.-36"), w/ 36" Dia. Catch Basin	EA	
24	Remove and Replace Storm Structure (I.D.-24"), w/ 48" Dia. Manhole	EA	
25	Remove and Replace Catch Basin, Type "C" - 24" Dia. w/ 2' Sump	EA	
26	Abandon Existing Storm Structure	EA	
27	48" Dia. Storm Manhole in Pavement	EA	
28	48" Dia. Storm Manhole in Parkway	EA	
29	Remove and Replace Inlet, Type "A" - 24" Dia.	EA	
30	Inlet, Type "A" - 24" Dia.	EA	
31	Reset Manhole Frame in Pavement	EA	
32	Reset Frame in Curb	EA	3
33	Remove & Replace Frame & Lid in Curb	EA	
34	Remove & Replace Frame & Lid in Pavement	EA	
35	Remove & Replace Frame in Parkway	EA	
36	Storm Sewer Service, PVC SDR 26, 6"	LF	
37	Storm Sewer Pipe, PVC SDR 21 - 10"	LF	
38	Storm Sewer Pipe, PVC SDR 26, Removal and Replacement - 10"	LF	
39	Storm Sewer Pipe, PVC SDR 26, Removal and Replacement - 12"	LF	
40	Storm Sewer Pipe, PVC SDR 21, Removal and Replacement - 10"	LF	
41	Storm Sewer Pipe, PVC SDR 21, Removal and Replacement - 12"	LF	
42	Storm Sewer Pipe, PVC SDR 26 - 12"	LF	38
43	Storm Sewer Pipe, PVC SDR 21 - 12"	LF	
44	Storm Sewer Pipe, RCP Class 3 Removal and Replacement- 12"	LF	
45	Storm Sewer Pipe, RCP Class 4 Removal and Replacement- 10"	LF	
46	Storm Sewer Pipe, RCP Class 4 Removal and Replacement- 12"	LF	
47	Storm Sewer Pipe, RCP Class 3 Removal and Replacement - 15"	LF	
48	Storm Sewer Pipe, RCP Class 4 Removal and Replacement - 15"	LF	
49	Abandon Storm Sewer Pipe - Fill with Flowable Fill	CY	
50	Storm Sewer Pipe Removal	LF	
	TOTAL		

Squire Lane - Dunham Road to West End

No.	Description	Unit	QTY
1	Remove & Replace Fire Hydrant, Aux. Valve Box & Install Stabilizer	EA	
2	Remove & Replace 6" Auxilliary Valve, 5-1/4" Box & Install Stabilizer	EA	
3	Remove & Replace B-Box in Driveway or Sidewalk	EA	
4	Reset 5-1/4" Auxiliary Valve Box & Install Stabilizer	EA	
5	Replace 5-1/4" Auxiliary Valve Box & Install Stabilizer	EA	4
6	Replace 5-1/4" Valve Box in Pavement & Install Stabilizer	EA	
7	Replace Valve Box with Valve Vault (I.D.-48")	EA	
8	Reset Valve Vault Frame - in Sidewalk	EA	
9	Remove & Replace Frame & Lid in Pavement	EA	
10	Remove & Replace 6" Valve & Valve Vault (I.D.-48")	EA	3
11	Remove 12" Valve & Valve Vault (I.D.-48") - Cut Main & Cap Tee	EA	
12	Lower 4" Class 52 Ductile Iron Water Main	LF	
13	10" Ductile Iron Water Main - Casing Pipe	LS	
14	Remove & Replace Sanitary Manhole (I.D.-48")	EA	
15	Sanitary Manhole Chimney Seal	EA	
16	Remove & Replace Frame & Lid in Pavement	EA	
17	Sanitary Sewer Pipe Removal and Replacement - 8"	LF	
18	Sanitary Sewer Pipe Removal and Replacement - 10"	LF	
19	Sanitary Manholes to be Reconstructed	EA	
20	Sanitary Sewer Service Removal and Replacement 6"	LF	
21	Remove and Replace Storm Manhole (I.D.-48"), w/ 48" Dia. Manhole	EA	
22	Remove and Replace Storm Structure (I.D.-48"), w/ 36" Dia. Catch Basin	EA	
23	Remove and Replace Storm Structure (I.D.-36"), w/ 36" Dia. Catch Basin	EA	
24	Remove and Replace Storm Structure (I.D.-24"), w/ 48" Dia. Manhole	EA	
25	Remove and Replace Catch Basin, Type "C" - 24" Dia. w/ 2' Sump	EA	
26	Abandon Existing Storm Structure	EA	
27	48" Dia. Storm Manhole in Pavement	EA	
28	48" Dia. Storm Manhole in Parkway	EA	
29	Remove and Replace Inlet, Type "A" - 24" Dia.	EA	
30	Inlet, Type "A" - 24" Dia.	EA	
31	Reset Manhole Frame in Pavement	EA	
32	Reset Frame in Curb	EA	
33	Remove & Replace Frame & Lid in Curb	EA	
34	Remove & Replace Frame & Lid in Pavement	EA	
35	Remove & Replace Frame in Parkway	EA	
36	Storm Sewer Service, PVC SDR 26, 6"	LF	
37	Storm Sewer Pipe, PVC SDR 21 - 10"	LF	
38	Storm Sewer Pipe, PVC SDR 26, Removal and Replacement - 10"	LF	
39	Storm Sewer Pipe, PVC SDR 26, Removal and Replacement - 12"	LF	
40	Storm Sewer Pipe, PVC SDR 21, Removal and Replacement - 10"	LF	
41	Storm Sewer Pipe, PVC SDR 21, Removal and Replacement - 12"	LF	
42	Storm Sewer Pipe, PVC SDR 26 - 12"	LF	
43	Storm Sewer Pipe, PVC SDR 21 - 12"	LF	
44	Storm Sewer Pipe, RCP Class 3 Removal and Replacement- 12"	LF	
45	Storm Sewer Pipe, RCP Class 4 Removal and Replacement- 10"	LF	
46	Storm Sewer Pipe, RCP Class 4 Removal and Replacement- 12"	LF	
47	Storm Sewer Pipe, RCP Class 3 Removal and Replacement - 15"	LF	
48	Storm Sewer Pipe, RCP Class 4 Removal and Replacement - 15"	LF	
49	Abandon Storm Sewer Pipe - Fill with Flowable Fill	CY	
50	Storm Sewer Pipe Removal	LF	
	TOTAL		

Jeanette Avenue - S. Tyler to Cambridge Dr.

No.	Description	Unit	QTY
1	Remove & Replace Fire Hydrant, Aux. Valve Box & Install Stabilizer	EA	
2	Remove & Replace 6" Auxilliary Valve, 5-1/4" Box & Install Stabilizer	EA	1
3	Remove & Replace B-Box in Driveway or Sidewalk	EA	3
4	Reset 5-1/4" Auxiliary Valve Box & Install Stabilizer	EA	
5	Replace 5-1/4" Auxiliary Valve Box & Install Stabilizer	EA	2
6	Replace 5-1/4" Valve Box in Pavement & Install Stabilizer	EA	
7	Replace Valve Box with Valve Vault (I.D.-48")	EA	
8	Reset Valve Vault Frame - in Sidewalk	EA	
9	Remove & Replace Frame & Lid in Pavement	EA	
10	Remove & Replace 6" Valve & Valve Vault (I.D.-48")	EA	
11	Remove 12" Valve & Valve Vault (I.D.-48") - Cut Main & Cap Tee	EA	
12	Lower 4" Class 52 Ductile Iron Water Main	LF	
13	10" Ductile Iron Water Main - Casing Pipe	LS	
14	Remove & Replace Sanitary Manhole (I.D.-48")	EA	
15	Sanitary Manhole Chimney Seal	EA	
16	Remove & Replace Frame & Lid in Pavement	EA	
17	Sanitary Sewer Pipe Removal and Replacement - 8"	LF	
18	Sanitary Sewer Pipe Removal and Replacement - 10"	LF	
19	Sanitary Manholes to be Reconstructed	EA	
20	Sanitary Sewer Service Removal and Replacement 6"	LF	
21	Remove and Replace Storm Manhole (I.D.-48"), w/ 48" Dia. Manhole	EA	
22	Remove and Replace Storm Structure (I.D.-48"), w/ 36" Dia. Catch Basin	EA	
23	Remove and Replace Storm Structure (I.D.-36"), w/ 36" Dia. Catch Basin	EA	
24	Remove and Replace Storm Structure (I.D.-24"), w/ 48" Dia. Manhole	EA	
25	Remove and Replace Catch Basin, Type "C" - 24" Dia. w/ 2' Sump	EA	1
26	Abandon Existing Storm Structure	EA	
27	48" Dia. Storm Manhole in Pavement	EA	
28	48" Dia. Storm Manhole in Parkway	EA	
29	Remove and Replace Inlet, Type "A" - 24" Dia.	EA	
30	Inlet, Type "A" - 24" Dia.	EA	
31	Reset Manhole Frame in Pavement	EA	
32	Reset Frame in Curb	EA	
33	Remove & Replace Frame & Lid in Curb	EA	
34	Remove & Replace Frame & Lid in Pavement	EA	
35	Remove & Replace Frame in Parkway	EA	
36	Storm Sewer Service, PVC SDR 26, 6"	LF	
37	Storm Sewer Pipe, PVC SDR 21 - 10"	LF	
38	Storm Sewer Pipe, PVC SDR 26, Removal and Replacement - 10"	LF	
39	Storm Sewer Pipe, PVC SDR 26, Removal and Replacement - 12"	LF	
40	Storm Sewer Pipe, PVC SDR 21, Removal and Replacement - 10"	LF	
41	Storm Sewer Pipe, PVC SDR 21, Removal and Replacement - 12"	LF	
42	Storm Sewer Pipe, PVC SDR 26 - 12"	LF	
43	Storm Sewer Pipe, PVC SDR 21 - 12"	LF	
44	Storm Sewer Pipe, RCP Class 3 Removal and Replacement- 12"	LF	
45	Storm Sewer Pipe, RCP Class 4 Removal and Replacement- 10"	LF	
46	Storm Sewer Pipe, RCP Class 4 Removal and Replacement- 12"	LF	
47	Storm Sewer Pipe, RCP Class 3 Removal and Replacement - 15"	LF	
48	Storm Sewer Pipe, RCP Class 4 Removal and Replacement - 15"	LF	
49	Abandon Storm Sewer Pipe - Fill with Flowable Fill	CY	
50	Storm Sewer Pipe Removal	LF	
	TOTAL		

Midway Avenue - Jeanette Ave. to Cambridge Dr.

No.	Description	Unit	QTY
1	Remove & Replace Fire Hydrant, Aux. Valve Box & Install Stabilizer	EA	
2	Remove & Replace 6" Auxilliary Valve, 5-1/4" Box & Install Stabilizer	EA	
3	Remove & Replace B-Box in Driveway or Sidewalk	EA	
4	Reset 5-1/4" Auxiliary Valve Box & Install Stabilizer	EA	
5	Replace 5-1/4" Auxiliary Valve Box & Install Stabilizer	EA	
6	Replace 5-1/4" Valve Box in Pavement & Install Stabilizer	EA	
7	Replace Valve Box with Valve Vault (I.D.-48")	EA	
8	Reset Valve Vault Frame - in Sidewalk	EA	
9	Remove & Replace Frame & Lid in Pavement	EA	
10	Remove & Replace 6" Valve & Valve Vault (I.D.-48")	EA	
11	Remove 12" Valve & Valve Vault (I.D.-48") - Cut Main & Cap Tee	EA	
12	Lower 4" Class 52 Ductile Iron Water Main	LF	
13	10" Ductile Iron Water Main - Casing Pipe	LS	
14	Remove & Replace Sanitary Manhole (I.D.-48")	EA	
15	Sanitary Manhole Chimney Seal	EA	
16	Remove & Replace Frame & Lid in Pavement	EA	
17	Sanitary Sewer Pipe Removal and Replacement - 8"	LF	
18	Sanitary Sewer Pipe Removal and Replacement - 10"	LF	
19	Sanitary Manholes to be Reconstructed	EA	
20	Sanitary Sewer Service Removal and Replacement 6"	LF	
21	Remove and Replace Storm Manhole (I.D.-48"), w/ 48" Dia. Manhole	EA	
22	Remove and Replace Storm Structure (I.D.-48"), w/ 36" Dia. Catch Basin	EA	
23	Remove and Replace Storm Structure (I.D.-36"), w/ 36" Dia. Catch Basin	EA	
24	Remove and Replace Storm Structure (I.D.-24"), w/ 48" Dia. Manhole	EA	
25	Remove and Replace Catch Basin, Type "C" - 24" Dia. w/ 2' Sump	EA	
26	Abandon Existing Storm Structure	EA	
27	48" Dia. Storm Manhole in Pavement	EA	
28	48" Dia. Storm Manhole in Parkway	EA	
29	Remove and Replace Inlet, Type "A" - 24" Dia.	EA	
30	Inlet, Type "A" - 24" Dia.	EA	
31	Reset Manhole Frame in Pavement	EA	
32	Reset Frame in Curb	EA	
33	Remove & Replace Frame & Lid in Curb	EA	
34	Remove & Replace Frame & Lid in Pavement	EA	
35	Remove & Replace Frame in Parkway	EA	
36	Storm Sewer Service, PVC SDR 26, 6"	LF	
37	Storm Sewer Pipe, PVC SDR 21 - 10"	LF	
38	Storm Sewer Pipe, PVC SDR 26, Removal and Replacement - 10"	LF	
39	Storm Sewer Pipe, PVC SDR 26, Removal and Replacement - 12"	LF	
40	Storm Sewer Pipe, PVC SDR 21, Removal and Replacement - 10"	LF	
41	Storm Sewer Pipe, PVC SDR 21, Removal and Replacement - 12"	LF	
42	Storm Sewer Pipe, PVC SDR 26 - 12"	LF	
43	Storm Sewer Pipe, PVC SDR 21 - 12"	LF	
44	Storm Sewer Pipe, RCP Class 3 Removal and Replacement- 12"	LF	
45	Storm Sewer Pipe, RCP Class 4 Removal and Replacement- 10"	LF	
46	Storm Sewer Pipe, RCP Class 4 Removal and Replacement- 12"	LF	
47	Storm Sewer Pipe, RCP Class 3 Removal and Replacement - 15"	LF	
48	Storm Sewer Pipe, RCP Class 4 Removal and Replacement - 15"	LF	
49	Abandon Storm Sewer Pipe - Fill with Flowable Fill	CY	
50	Storm Sewer Pipe Removal	LF	
	TOTAL		

Cumberland Green Drive - Cumberland Parkway to Cambridge Dr.

No.	Description	Unit	QTY
1	Remove & Replace Fire Hydrant, Aux. Valve Box & Install Stabilizer	EA	
2	Remove & Replace 6" Auxilliary Valve, 5-1/4" Box & Install Stabilizer	EA	
3	Remove & Replace B-Box in Driveway or Sidewalk	EA	
4	Reset 5-1/4" Auxiliary Valve Box & Install Stabilizer	EA	
5	Replace 5-1/4" Auxiliary Valve Box & Install Stabilizer	EA	
6	Replace 5-1/4" Valve Box in Pavement & Install Stabilizer	EA	
7	Replace Valve Box with Valve Vault (I.D.-48")	EA	
8	Reset Valve Vault Frame - in Sidewalk	EA	
9	Remove & Replace Frame & Lid in Pavement	EA	
10	Remove & Replace 6" Valve & Valve Vault (I.D.-48")	EA	
11	Remove 12" Valve & Valve Vault (I.D.-48") - Cut Main & Cap Tee	EA	
12	Lower 4" Class 52 Ductile Iron Water Main	LF	
13	10" Ductile Iron Water Main - Casing Pipe	LS	
14	Remove & Replace Sanitary Manhole (I.D.-48")	EA	
15	Sanitary Manhole Chimney Seal	EA	
16	Remove & Replace Frame & Lid in Pavement	EA	
17	Sanitary Sewer Pipe Removal and Replacement - 8"	LF	8
18	Sanitary Sewer Pipe Removal and Replacement - 10"	LF	
19	Sanitary Manholes to be Reconstructed	EA	
20	Sanitary Sewer Service Removal and Replacement 6"	LF	6
21	Remove and Replace Storm Manhole (I.D.-48"), w/ 48" Dia. Manhole	EA	
22	Remove and Replace Storm Structure (I.D.-48"), w/ 36" Dia. Catch Basin	EA	
23	Remove and Replace Storm Structure (I.D.-36"), w/ 36" Dia. Catch Basin	EA	
24	Remove and Replace Storm Structure (I.D.-24"), w/ 48" Dia. Manhole	EA	
25	Remove and Replace Catch Basin, Type "C" - 24" Dia. w/ 2' Sump	EA	
26	Abandon Existing Storm Structure	EA	
27	48" Dia. Storm Manhole in Pavement	EA	
28	48" Dia. Storm Manhole in Parkway	EA	
29	Remove and Replace Inlet, Type "A" - 24" Dia.	EA	
30	Inlet, Type "A" - 24" Dia.	EA	
31	Reset Manhole Frame in Pavement	EA	
32	Reset Frame in Curb	EA	3
33	Remove & Replace Frame & Lid in Curb	EA	
34	Remove & Replace Frame & Lid in Pavement	EA	
35	Remove & Replace Frame in Parkway	EA	
36	Storm Sewer Service, PVC SDR 26, 6"	LF	
37	Storm Sewer Pipe, PVC SDR 21 - 10"	LF	
38	Storm Sewer Pipe, PVC SDR 26, Removal and Replacement - 10"	LF	
39	Storm Sewer Pipe, PVC SDR 26, Removal and Replacement - 12"	LF	
40	Storm Sewer Pipe, PVC SDR 21, Removal and Replacement - 10"	LF	
41	Storm Sewer Pipe, PVC SDR 21, Removal and Replacement - 12"	LF	
42	Storm Sewer Pipe, PVC SDR 26 - 12"	LF	
43	Storm Sewer Pipe, PVC SDR 21 - 12"	LF	
44	Storm Sewer Pipe, RCP Class 3 Removal and Replacement- 12"	LF	
45	Storm Sewer Pipe, RCP Class 4 Removal and Replacement- 10"	LF	
46	Storm Sewer Pipe, RCP Class 4 Removal and Replacement- 12"	LF	40
47	Storm Sewer Pipe, RCP Class 3 Removal and Replacement - 15"	LF	
48	Storm Sewer Pipe, RCP Class 4 Removal and Replacement - 15"	LF	
49	Abandon Storm Sewer Pipe - Fill with Flowable Fill	CY	
50	Storm Sewer Pipe Removal	LF	
	TOTAL		

Ash Street - Roosevelt St. to Horne St.

No.	Description	Unit	QTY
1	Remove & Replace Fire Hydrant, Aux. Valve Box & Install Stabilizer	EA	
2	Remove & Replace 6" Auxilliary Valve, 5-1/4" Box & Install Stabilizer	EA	
3	Remove & Replace B-Box in Driveway or Sidewalk	EA	
4	Reset 5-1/4" Auxiliary Valve Box & Install Stabilizer	EA	
5	Replace 5-1/4" Auxiliary Valve Box & Install Stabilizer	EA	
6	Replace 5-1/4" Valve Box in Pavement & Install Stabilizer	EA	
7	Replace Valve Box with Valve Vault (I.D.-48")	EA	
8	Reset Valve Vault Frame - in Sidewalk	EA	
9	Remove & Replace Frame & Lid in Pavement	EA	4
10	Remove & Replace 6" Valve & Valve Vault (I.D.-48")	EA	
11	Remove 12" Valve & Valve Vault (I.D.-48") - Cut Main & Cap Tee	EA	
12	Lower 4" Class 52 Ductile Iron Water Main	LF	
13	10" Ductile Iron Water Main - Casing Pipe	LS	
14	Remove & Replace Sanitary Manhole (I.D.-48")	EA	1
15	Sanitary Manhole Chimney Seal	EA	1
16	Remove & Replace Frame & Lid in Pavement	EA	1
17	Sanitary Sewer Pipe Removal and Replacement - 8"	LF	
18	Sanitary Sewer Pipe Removal and Replacement - 10"	LF	20
19	Sanitary Manholes to be Reconstructed	EA	
20	Sanitary Sewer Service Removal and Replacement 6"	LF	
21	Remove and Replace Storm Manhole (I.D.-48"), w/ 48" Dia. Manhole	EA	2
22	Remove and Replace Storm Structure (I.D.-48"), w/ 36" Dia. Catch Basin	EA	
23	Remove and Replace Storm Structure (I.D.-36"), w/ 36" Dia. Catch Basin	EA	1
24	Remove and Replace Storm Structure (I.D.-24"), w/ 48" Dia. Manhole	EA	
25	Remove and Replace Catch Basin, Type "C" - 24" Dia. w/ 2' Sump	EA	1
26	Abandon Existing Storm Structure	EA	
27	48" Dia. Storm Manhole in Pavement	EA	
28	48" Dia. Storm Manhole in Parkway	EA	
29	Remove and Replace Inlet, Type "A" - 24" Dia.	EA	2
30	Inlet, Type "A" - 24" Dia.	EA	1
31	Reset Manhole Frame in Pavement	EA	
32	Reset Frame in Curb	EA	
33	Remove & Replace Frame & Lid in Curb	EA	
34	Remove & Replace Frame & Lid in Pavement	EA	1
35	Remove & Replace Frame in Parkway	EA	
36	Storm Sewer Service, PVC SDR 26, 6"	LF	
37	Storm Sewer Pipe, PVC SDR 21 - 10"	LF	
38	Storm Sewer Pipe, PVC SDR 26, Removal and Replacement - 10"	LF	20
39	Storm Sewer Pipe, PVC SDR 26, Removal and Replacement - 12"	LF	
40	Storm Sewer Pipe, PVC SDR 21, Removal and Replacement - 10"	LF	
41	Storm Sewer Pipe, PVC SDR 21, Removal and Replacement - 12"	LF	
42	Storm Sewer Pipe, PVC SDR 26 - 12"	LF	
43	Storm Sewer Pipe, PVC SDR 21 - 12"	LF	
44	Storm Sewer Pipe, RCP Class 3 Removal and Replacement- 12"	LF	
45	Storm Sewer Pipe, RCP Class 4 Removal and Replacement- 10"	LF	12
46	Storm Sewer Pipe, RCP Class 4 Removal and Replacement- 12"	LF	8
47	Storm Sewer Pipe, RCP Class 3 Removal and Replacement - 15"	LF	130
48	Storm Sewer Pipe, RCP Class 4 Removal and Replacement - 15"	LF	
49	Abandon Storm Sewer Pipe - Fill with Flowable Fill	CY	
50	Storm Sewer Pipe Removal	LF	
	TOTAL		

McKinley Street - 4th St. to 6th St.

No.	Description	Unit	QTY
1	Remove & Replace Fire Hydrant, Aux. Valve Box & Install Stabilizer	EA	1
2	Remove & Replace 6" Auxilliary Valve, 5-1/4" Box & Install Stabilizer	EA	
3	Remove & Replace B-Box in Driveway or Sidewalk	EA	
4	Reset 5-1/4" Auxiliary Valve Box & Install Stabilizer	EA	
5	Replace 5-1/4" Auxiliary Valve Box & Install Stabilizer	EA	
6	Replace 5-1/4" Valve Box in Pavement & Install Stabilizer	EA	
7	Replace Valve Box with Valve Vault (I.D.-48")	EA	
8	Reset Valve Vault Frame - in Sidewalk	EA	
9	Remove & Replace Frame & Lid in Pavement	EA	3
10	Remove & Replace 6" Valve & Valve Vault (I.D.-48")	EA	
11	Remove 12" Valve & Valve Vault (I.D.-48") - Cut Main & Cap Tee	EA	
12	Lower 4" Class 52 Ductile Iron Water Main	LF	24
13	10" Ductile Iron Water Main - Casing Pipe	LS	1
14	Remove & Replace Sanitary Manhole (I.D.-48")	EA	1
15	Sanitary Manhole Chimney Seal	EA	1
16	Remove & Replace Frame & Lid in Pavement	EA	1
17	Sanitary Sewer Pipe Removal and Replacement - 8"	LF	12
18	Sanitary Sewer Pipe Removal and Replacement - 10"	LF	
19	Sanitary Manholes to be Reconstructed	EA	1
20	Sanitary Sewer Service Removal and Replacement 6"	LF	20
21	Remove and Replace Storm Manhole (I.D.-48"), w/ 48" Dia. Manhole	EA	3
22	Remove and Replace Storm Structure (I.D.-48"), w/ 36" Dia. Catch Basin	EA	
23	Remove and Replace Storm Structure (I.D.-36"), w/ 36" Dia. Catch Basin	EA	
24	Remove and Replace Storm Structure (I.D.-24"), w/ 48" Dia. Manhole	EA	
25	Remove and Replace Catch Basin, Type "C" - 24" Dia. w/ 2' Sump	EA	1
26	Abandon Existing Storm Structure	EA	
27	48" Dia. Storm Manhole in Pavement	EA	
28	48" Dia. Storm Manhole in Parkway	EA	
29	Remove and Replace Inlet, Type "A" - 24" Dia.	EA	
30	Inlet, Type "A" - 24" Dia.	EA	
31	Reset Manhole Frame in Pavement	EA	
32	Reset Frame in Curb	EA	
33	Remove & Replace Frame & Lid in Curb	EA	
34	Remove & Replace Frame & Lid in Pavement	EA	
35	Remove & Replace Frame in Parkway	EA	
36	Storm Sewer Service, PVC SDR 26, 6"	LF	35
37	Storm Sewer Pipe, PVC SDR 21 - 10"	LF	
38	Storm Sewer Pipe, PVC SDR 26, Removal and Replacement - 10"	LF	
39	Storm Sewer Pipe, PVC SDR 26, Removal and Replacement - 12"	LF	10
40	Storm Sewer Pipe, PVC SDR 21, Removal and Replacement - 10"	LF	
41	Storm Sewer Pipe, PVC SDR 21, Removal and Replacement - 12"	LF	
42	Storm Sewer Pipe, PVC SDR 26 - 12"	LF	138
43	Storm Sewer Pipe, PVC SDR 21 - 12"	LF	
44	Storm Sewer Pipe, RCP Class 3 Removal and Replacement- 12"	LF	
45	Storm Sewer Pipe, RCP Class 4 Removal and Replacement- 10"	LF	
46	Storm Sewer Pipe, RCP Class 4 Removal and Replacement- 12"	LF	
47	Storm Sewer Pipe, RCP Class 3 Removal and Replacement - 15"	LF	
48	Storm Sewer Pipe, RCP Class 4 Removal and Replacement - 15"	LF	275
49	Abandon Storm Sewer Pipe - Fill with Flowable Fill	CY	4
50	Storm Sewer Pipe Removal	LF	
	TOTAL		

Kehoe Drive - Horne St. to 8th St.

No.	Description	Unit	QTY
1	Remove & Replace Fire Hydrant, Aux. Valve Box & Install Stabilizer	EA	3
2	Remove & Replace 6" Auxilliary Valve, 5-1/4" Box & Install Stabilizer	EA	
3	Remove & Replace B-Box in Driveway or Sidewalk	EA	1
4	Reset 5-1/4" Auxiliary Valve Box & Install Stabilizer	EA	
5	Replace 5-1/4" Auxiliary Valve Box & Install Stabilizer	EA	1
6	Replace 5-1/4" Valve Box in Pavement & Install Stabilizer	EA	1
7	Replace Valve Box with Valve Vault (I.D.-48")	EA	1
8	Reset Valve Vault Frame - in Sidewalk	EA	1
9	Remove & Replace Frame & Lid in Pavement	EA	
10	Remove & Replace 6" Valve & Valve Vault (I.D.-48")	EA	
11	Remove 12" Valve & Valve Vault (I.D.-48") - Cut Main & Cap Tee	EA	
12	Lower 4" Class 52 Ductile Iron Water Main	LF	
13	10" Ductile Iron Water Main - Casing Pipe	LS	
14	Remove & Replace Sanitary Manhole (I.D.-48")	EA	1
15	Sanitary Manhole Chimney Seal	EA	1
16	Remove & Replace Frame & Lid in Pavement	EA	1
17	Sanitary Sewer Pipe Removal and Replacement - 8"	LF	
18	Sanitary Sewer Pipe Removal and Replacement - 10"	LF	
19	Sanitary Manholes to be Reconstructed	EA	
20	Sanitary Sewer Service Removal and Replacement 6"	LF	
21	Remove and Replace Storm Manhole (I.D.-48"), w/ 48" Dia. Manhole	EA	1
22	Remove and Replace Storm Structure (I.D.-48"), w/ 36" Dia. Catch Basin	EA	
23	Remove and Replace Storm Structure (I.D.-36"), w/ 36" Dia. Catch Basin	EA	3
24	Remove and Replace Storm Structure (I.D.-24"), w/ 48" Dia. Manhole	EA	
25	Remove and Replace Catch Basin, Type "C" - 24" Dia. w/ 2' Sump	EA	1
26	Abandon Existing Storm Structure	EA	
27	48" Dia. Storm Manhole in Pavement	EA	
28	48" Dia. Storm Manhole in Parkway	EA	
29	Remove and Replace Inlet, Type "A" - 24" Dia.	EA	4
30	Inlet, Type "A" - 24" Dia.	EA	
31	Reset Manhole Frame in Pavement	EA	
32	Reset Frame in Curb	EA	3
33	Remove & Replace Frame & Lid in Curb	EA	
34	Remove & Replace Frame & Lid in Pavement	EA	
35	Remove & Replace Frame in Parkway	EA	
36	Storm Sewer Service, PVC SDR 26, 6"	LF	
37	Storm Sewer Pipe, PVC SDR 21 - 10"	LF	
38	Storm Sewer Pipe, PVC SDR 26, Removal and Replacement - 10"	LF	
39	Storm Sewer Pipe, PVC SDR 26, Removal and Replacement - 12"	LF	
40	Storm Sewer Pipe, PVC SDR 21, Removal and Replacement - 10"	LF	
41	Storm Sewer Pipe, PVC SDR 21, Removal and Replacement - 12"	LF	
42	Storm Sewer Pipe, PVC SDR 26 - 12"	LF	
43	Storm Sewer Pipe, PVC SDR 21 - 12"	LF	
44	Storm Sewer Pipe, RCP Class 3 Removal and Replacement- 12"	LF	10
45	Storm Sewer Pipe, RCP Class 4 Removal and Replacement- 10"	LF	
46	Storm Sewer Pipe, RCP Class 4 Removal and Replacement- 12"	LF	
47	Storm Sewer Pipe, RCP Class 3 Removal and Replacement - 15"	LF	
48	Storm Sewer Pipe, RCP Class 4 Removal and Replacement - 15"	LF	
49	Abandon Storm Sewer Pipe - Fill with Flowable Fill	CY	
50	Storm Sewer Pipe Removal	LF	
	TOTAL		

Foxfield Drive - Kirk Rd. to Fox Chase Dr.

No.	Description	Unit	QTY
1	Remove & Replace Fire Hydrant, Aux. Valve Box & Install Stabilizer	EA	
2	Remove & Replace 6" Auxilliary Valve, 5-1/4" Box & Install Stabilizer	EA	
3	Remove & Replace B-Box in Driveway or Sidewalk	EA	
4	Reset 5-1/4" Auxiliary Valve Box & Install Stabilizer	EA	
5	Replace 5-1/4" Auxiliary Valve Box & Install Stabilizer	EA	2
6	Replace 5-1/4" Valve Box in Pavement & Install Stabilizer	EA	
7	Replace Valve Box with Valve Vault (I.D.-48")	EA	
8	Reset Valve Vault Frame - in Sidewalk	EA	
9	Remove & Replace Frame & Lid in Pavement	EA	
10	Remove & Replace 6" Valve & Valve Vault (I.D.-48")	EA	
11	Remove 12" Valve & Valve Vault (I.D.-48") - Cut Main & Cap Tee	EA	
12	Lower 4" Class 52 Ductile Iron Water Main	LF	
13	10" Ductile Iron Water Main - Casing Pipe	LS	
14	Remove & Replace Sanitary Manhole (I.D.-48")	EA	
15	Sanitary Manhole Chimney Seal	EA	
16	Remove & Replace Frame & Lid in Pavement	EA	
17	Sanitary Sewer Pipe Removal and Replacement - 8"	LF	
18	Sanitary Sewer Pipe Removal and Replacement - 10"	LF	
19	Sanitary Manholes to be Reconstructed	EA	
20	Sanitary Sewer Service Removal and Replacement 6"	LF	
21	Remove and Replace Storm Manhole (I.D.-48"), w/ 48" Dia. Manhole	EA	
22	Remove and Replace Storm Structure (I.D.-48"), w/ 36" Dia. Catch Basin	EA	1
23	Remove and Replace Storm Structure (I.D.-36"), w/ 36" Dia. Catch Basin	EA	
24	Remove and Replace Storm Structure (I.D.-24"), w/ 48" Dia. Manhole	EA	
25	Remove and Replace Catch Basin, Type "C" - 24" Dia. w/ 2' Sump	EA	
26	Abandon Existing Storm Structure	EA	
27	48" Dia. Storm Manhole in Pavement	EA	
28	48" Dia. Storm Manhole in Parkway	EA	
29	Remove and Replace Inlet, Type "A" - 24" Dia.	EA	
30	Inlet, Type "A" - 24" Dia.	EA	
31	Reset Manhole Frame in Pavement	EA	
32	Reset Frame in Curb	EA	4
33	Remove & Replace Frame & Lid in Curb	EA	
34	Remove & Replace Frame & Lid in Pavement	EA	
35	Remove & Replace Frame in Parkway	EA	
36	Storm Sewer Service, PVC SDR 26, 6"	LF	
37	Storm Sewer Pipe, PVC SDR 21 - 10"	LF	
38	Storm Sewer Pipe, PVC SDR 26, Removal and Replacement - 10"	LF	
39	Storm Sewer Pipe, PVC SDR 26, Removal and Replacement - 12"	LF	
40	Storm Sewer Pipe, PVC SDR 21, Removal and Replacement - 10"	LF	
41	Storm Sewer Pipe, PVC SDR 21, Removal and Replacement - 12"	LF	
42	Storm Sewer Pipe, PVC SDR 26 - 12"	LF	
43	Storm Sewer Pipe, PVC SDR 21 - 12"	LF	
44	Storm Sewer Pipe, RCP Class 3 Removal and Replacement- 12"	LF	
45	Storm Sewer Pipe, RCP Class 4 Removal and Replacement- 10"	LF	
46	Storm Sewer Pipe, RCP Class 4 Removal and Replacement- 12"	LF	
47	Storm Sewer Pipe, RCP Class 3 Removal and Replacement - 15"	LF	
48	Storm Sewer Pipe, RCP Class 4 Removal and Replacement - 15"	LF	
49	Abandon Storm Sewer Pipe - Fill with Flowable Fill	CY	
50	Storm Sewer Pipe Removal	LF	
	TOTAL		

Frontage Road - 38th Ave. to West End

No.	Description	Unit	QTY
1	Remove & Replace Fire Hydrant, Aux. Valve Box & Install Stabilizer	EA	
2	Remove & Replace 6" Auxilliary Valve, 5-1/4" Box & Install Stabilizer	EA	
3	Remove & Replace B-Box in Driveway or Sidewalk	EA	
4	Reset 5-1/4" Auxiliary Valve Box & Install Stabilizer	EA	
5	Replace 5-1/4" Auxiliary Valve Box & Install Stabilizer	EA	
6	Replace 5-1/4" Valve Box in Pavement & Install Stabilizer	EA	
7	Replace Valve Box with Valve Vault (I.D.-48")	EA	
8	Reset Valve Vault Frame - in Sidewalk	EA	
9	Remove & Replace Frame & Lid in Pavement	EA	
10	Remove & Replace 6" Valve & Valve Vault (I.D.-48")	EA	
11	Remove 12" Valve & Valve Vault (I.D.-48") - Cut Main & Cap Tee	EA	1
12	Lower 4" Class 52 Ductile Iron Water Main	LF	
13	10" Ductile Iron Water Main - Casing Pipe	LS	
14	Remove & Replace Sanitary Manhole (I.D.-48")	EA	
15	Sanitary Manhole Chimney Seal	EA	
16	Remove & Replace Frame & Lid in Pavement	EA	
17	Sanitary Sewer Pipe Removal and Replacement - 8"	LF	
18	Sanitary Sewer Pipe Removal and Replacement - 10"	LF	
19	Sanitary Manholes to be Reconstructed	EA	
20	Sanitary Sewer Service Removal and Replacement 6"	LF	
21	Remove and Replace Storm Manhole (I.D.-48"), w/ 48" Dia. Manhole	EA	
22	Remove and Replace Storm Structure (I.D.-48"), w/ 36" Dia. Catch Basin	EA	
23	Remove and Replace Storm Structure (I.D.-36"), w/ 36" Dia. Catch Basin	EA	
24	Remove and Replace Storm Structure (I.D.-24"), w/ 48" Dia. Manhole	EA	
25	Remove and Replace Catch Basin, Type "C" - 24" Dia. w/ 2' Sump	EA	
26	Abandon Existing Storm Structure	EA	
27	48" Dia. Storm Manhole in Pavement	EA	
28	48" Dia. Storm Manhole in Parkway	EA	
29	Remove and Replace Inlet, Type "A" - 24" Dia.	EA	
30	Inlet, Type "A" - 24" Dia.	EA	
31	Reset Manhole Frame in Pavement	EA	
32	Reset Frame in Curb	EA	3
33	Remove & Replace Frame & Lid in Curb	EA	1
34	Remove & Replace Frame & Lid in Pavement	EA	
35	Remove & Replace Frame in Parkway	EA	1
36	Storm Sewer Service, PVC SDR 26, 6"	LF	
37	Storm Sewer Pipe, PVC SDR 21 - 10"	LF	
38	Storm Sewer Pipe, PVC SDR 26, Removal and Replacement - 10"	LF	
39	Storm Sewer Pipe, PVC SDR 26, Removal and Replacement - 12"	LF	
40	Storm Sewer Pipe, PVC SDR 21, Removal and Replacement - 10"	LF	
41	Storm Sewer Pipe, PVC SDR 21, Removal and Replacement - 12"	LF	
42	Storm Sewer Pipe, PVC SDR 26 - 12"	LF	
43	Storm Sewer Pipe, PVC SDR 21 - 12"	LF	
44	Storm Sewer Pipe, RCP Class 3 Removal and Replacement- 12"	LF	
45	Storm Sewer Pipe, RCP Class 4 Removal and Replacement- 10"	LF	
46	Storm Sewer Pipe, RCP Class 4 Removal and Replacement- 12"	LF	
47	Storm Sewer Pipe, RCP Class 3 Removal and Replacement - 15"	LF	
48	Storm Sewer Pipe, RCP Class 4 Removal and Replacement - 15"	LF	
49	Abandon Storm Sewer Pipe - Fill with Flowable Fill	CY	
50	Storm Sewer Pipe Removal	LF	
	TOTAL		

Ohio Avenue - 3rd Ave. to 6th Ave.

No.	Description	Unit	QTY
1	Remove & Replace Fire Hydrant, Aux. Valve Box & Install Stabilizer	EA	
2	Remove & Replace 6" Auxilliary Valve, 5-1/4" Box & Install Stabilizer	EA	
3	Remove & Replace B-Box in Driveway or Sidewalk	EA	
4	Reset 5-1/4" Auxiliary Valve Box & Install Stabilizer	EA	1
5	Replace 5-1/4" Auxiliary Valve Box & Install Stabilizer	EA	
6	Replace 5-1/4" Valve Box in Pavement & Install Stabilizer	EA	
7	Replace Valve Box with Valve Vault (I.D.-48")	EA	
8	Reset Valve Vault Frame - in Sidewalk	EA	
9	Remove & Replace Frame & Lid in Pavement	EA	1
10	Remove & Replace 6" Valve & Valve Vault (I.D.-48")	EA	
11	Remove 12" Valve & Valve Vault (I.D.-48") - Cut Main & Cap Tee	EA	
12	Lower 4" Class 52 Ductile Iron Water Main	LF	
13	10" Ductile Iron Water Main - Casing Pipe	LS	
14	Remove & Replace Sanitary Manhole (I.D.-48")	EA	1
15	Sanitary Manhole Chimney Seal	EA	
16	Remove & Replace Frame & Lid in Pavement	EA	
17	Sanitary Sewer Pipe Removal and Replacement - 8"	LF	12
18	Sanitary Sewer Pipe Removal and Replacement - 10"	LF	
19	Sanitary Manholes to be Reconstructed	EA	
20	Sanitary Sewer Service Removal and Replacement 6"	LF	20
21	Remove and Replace Storm Manhole (I.D.-48"), w/ 48" Dia. Manhole	EA	
22	Remove and Replace Storm Structure (I.D.-48"), w/ 36" Dia. Catch Basin	EA	
23	Remove and Replace Storm Structure (I.D.-36"), w/ 36" Dia. Catch Basin	EA	2
24	Remove and Replace Storm Structure (I.D.-24"), w/ 48" Dia. Manhole	EA	1
25	Remove and Replace Catch Basin, Type "C" - 24" Dia. w/ 2' Sump	EA	4
26	Abandon Existing Storm Structure	EA	2
27	48" Dia. Storm Manhole in Pavement	EA	3
28	48" Dia. Storm Manhole in Parkway	EA	1
29	Remove and Replace Inlet, Type "A" - 24" Dia.	EA	4
30	Inlet, Type "A" - 24" Dia.	EA	
31	Reset Manhole Frame in Pavement	EA	
32	Reset Frame in Curb	EA	
33	Remove & Replace Frame & Lid in Curb	EA	
34	Remove & Replace Frame & Lid in Pavement	EA	
35	Remove & Replace Frame in Parkway	EA	
36	Storm Sewer Service, PVC SDR 26, 6"	LF	96
37	Storm Sewer Pipe, PVC SDR 21 - 10"	LF	66
38	Storm Sewer Pipe, PVC SDR 26, Removal and Replacement - 10"	LF	
39	Storm Sewer Pipe, PVC SDR 26, Removal and Replacement - 12"	LF	
40	Storm Sewer Pipe, PVC SDR 21, Removal and Replacement - 10"	LF	25
41	Storm Sewer Pipe, PVC SDR 21, Removal and Replacement - 12"	LF	69
42	Storm Sewer Pipe, PVC SDR 26 - 12"	LF	
43	Storm Sewer Pipe, PVC SDR 21 - 12"	LF	807
44	Storm Sewer Pipe, RCP Class 3 Removal and Replacement- 12"	LF	
45	Storm Sewer Pipe, RCP Class 4 Removal and Replacement- 10"	LF	
46	Storm Sewer Pipe, RCP Class 4 Removal and Replacement- 12"	LF	
47	Storm Sewer Pipe, RCP Class 3 Removal and Replacement - 15"	LF	
48	Storm Sewer Pipe, RCP Class 4 Removal and Replacement - 15"	LF	
49	Abandon Storm Sewer Pipe - Fill with Flowable Fill	CY	23
50	Storm Sewer Pipe Removal	LF	80
	TOTAL		

Lakeside Drive - Route 64 to South End

No.	Description	Unit	QTY
1	Remove & Replace Fire Hydrant, Aux. Valve Box & Install Stabilizer	EA	
2	Remove & Replace 6" Auxilliary Valve, 5-1/4" Box & Install Stabilizer	EA	
3	Remove & Replace B-Box in Driveway or Sidewalk	EA	
4	Reset 5-1/4" Auxiliary Valve Box & Install Stabilizer	EA	
5	Replace 5-1/4" Auxiliary Valve Box & Install Stabilizer	EA	
6	Replace 5-1/4" Valve Box in Pavement & Install Stabilizer	EA	
7	Replace Valve Box with Valve Vault (I.D.-48")	EA	
8	Reset Valve Vault Frame - in Sidewalk	EA	
9	Remove & Replace Frame & Lid in Pavement	EA	
10	Remove & Replace 6" Valve & Valve Vault (I.D.-48")	EA	
11	Remove 12" Valve & Valve Vault (I.D.-48") - Cut Main & Cap Tee	EA	
12	Lower 4" Class 52 Ductile Iron Water Main	LF	
13	10" Ductile Iron Water Main - Casing Pipe	LS	
14	Remove & Replace Sanitary Manhole (I.D.-48")	EA	
15	Sanitary Manhole Chimney Seal	EA	
16	Remove & Replace Frame & Lid in Pavement	EA	
17	Sanitary Sewer Pipe Removal and Replacement - 8"	LF	
18	Sanitary Sewer Pipe Removal and Replacement - 10"	LF	
19	Sanitary Manholes to be Reconstructed	EA	
20	Sanitary Sewer Service Removal and Replacement 6"	LF	
21	Remove and Replace Storm Manhole (I.D.-48"), w/ 48" Dia. Manhole	EA	
22	Remove and Replace Storm Structure (I.D.-48"), w/ 36" Dia. Catch Basin	EA	
23	Remove and Replace Storm Structure (I.D.-36"), w/ 36" Dia. Catch Basin	EA	
24	Remove and Replace Storm Structure (I.D.-24"), w/ 48" Dia. Manhole	EA	
25	Remove and Replace Catch Basin, Type "C" - 24" Dia. w/ 2' Sump	EA	
26	Abandon Existing Storm Structure	EA	
27	48" Dia. Storm Manhole in Pavement	EA	
28	48" Dia. Storm Manhole in Parkway	EA	
29	Remove and Replace Inlet, Type "A" - 24" Dia.	EA	
30	Inlet, Type "A" - 24" Dia.	EA	
31	Reset Manhole Frame in Pavement	EA	
32	Reset Frame in Curb	EA	1
33	Remove & Replace Frame & Lid in Curb	EA	
34	Remove & Replace Frame & Lid in Pavement	EA	
35	Remove & Replace Frame in Parkway	EA	
36	Storm Sewer Service, PVC SDR 26, 6"	LF	
37	Storm Sewer Pipe, PVC SDR 21 - 10"	LF	
38	Storm Sewer Pipe, PVC SDR 26, Removal and Replacement - 10"	LF	
39	Storm Sewer Pipe, PVC SDR 26, Removal and Replacement - 12"	LF	
40	Storm Sewer Pipe, PVC SDR 21, Removal and Replacement - 10"	LF	
41	Storm Sewer Pipe, PVC SDR 21, Removal and Replacement - 12"	LF	
42	Storm Sewer Pipe, PVC SDR 26 - 12"	LF	
43	Storm Sewer Pipe, PVC SDR 21 - 12"	LF	
44	Storm Sewer Pipe, RCP Class 3 Removal and Replacement- 12"	LF	
45	Storm Sewer Pipe, RCP Class 4 Removal and Replacement- 10"	LF	
46	Storm Sewer Pipe, RCP Class 4 Removal and Replacement- 12"	LF	
47	Storm Sewer Pipe, RCP Class 3 Removal and Replacement - 15"	LF	
48	Storm Sewer Pipe, RCP Class 4 Removal and Replacement - 15"	LF	
49	Abandon Storm Sewer Pipe - Fill with Flowable Fill	CY	
50	Storm Sewer Pipe Removal	LF	
	TOTAL		

2 Alleys - Mckinley to Cutler Between 4th Street and 5th Street

No.	Description	Unit	QTY
1	Remove & Replace Fire Hydrant, Aux. Valve Box & Install Stabilizer	EA	
2	Remove & Replace 6" Auxilliary Valve, 5-1/4" Box & Install Stabilizer	EA	
3	Remove & Replace B-Box in Driveway or Sidewalk	EA	
4	Reset 5-1/4" Auxiliary Valve Box & Install Stabilizer	EA	
5	Replace 5-1/4" Auxiliary Valve Box & Install Stabilizer	EA	
6	Replace 5-1/4" Valve Box in Pavement & Install Stabilizer	EA	
7	Replace Valve Box with Valve Vault (I.D.-48")	EA	
8	Reset Valve Vault Frame - in Sidewalk	EA	
9	Remove & Replace Frame & Lid in Pavement	EA	
10	Remove & Replace 6" Valve & Valve Vault (I.D.-48")	EA	
11	Remove 12" Valve & Valve Vault (I.D.-48") - Cut Main & Cap Tee	EA	
12	Lower 4" Class 52 Ductile Iron Water Main	LF	
13	10" Ductile Iron Water Main - Casing Pipe	LS	
14	Remove & Replace Sanitary Manhole (I.D.-48")	EA	
15	Sanitary Manhole Chimney Seal	EA	
16	Remove & Replace Frame & Lid in Pavement	EA	
17	Sanitary Sewer Pipe Removal and Replacement - 8"	LF	
18	Sanitary Sewer Pipe Removal and Replacement - 10"	LF	
19	Sanitary Manholes to be Reconstructed	EA	
20	Sanitary Sewer Service Removal and Replacement 6"	LF	
21	Remove and Replace Storm Manhole (I.D.-48"), w/ 48" Dia. Manhole	EA	
22	Remove and Replace Storm Structure (I.D.-48"), w/ 36" Dia. Catch Basin	EA	
23	Remove and Replace Storm Structure (I.D.-36"), w/ 36" Dia. Catch Basin	EA	
24	Remove and Replace Storm Structure (I.D.-24"), w/ 48" Dia. Manhole	EA	
25	Remove and Replace Catch Basin, Type "C" - 24" Dia. w/ 2' Sump	EA	
26	Abandon Existing Storm Structure	EA	
27	48" Dia. Storm Manhole in Pavement	EA	
28	48" Dia. Storm Manhole in Parkway	EA	
29	Remove and Replace Inlet, Type "A" - 24" Dia.	EA	
30	Inlet, Type "A" - 24" Dia.	EA	
31	Reset Manhole Frame in Pavement	EA	3
32	Reset Frame in Curb	EA	
33	Remove & Replace Frame & Lid in Curb	EA	
34	Remove & Replace Frame & Lid in Pavement	EA	1
35	Remove & Replace Frame in Parkway	EA	
36	Storm Sewer Service, PVC SDR 26, 6"	LF	
37	Storm Sewer Pipe, PVC SDR 21 - 10"	LF	
38	Storm Sewer Pipe, PVC SDR 26, Removal and Replacement - 10"	LF	
39	Storm Sewer Pipe, PVC SDR 26, Removal and Replacement - 12"	LF	
40	Storm Sewer Pipe, PVC SDR 21, Removal and Replacement - 10"	LF	
41	Storm Sewer Pipe, PVC SDR 21, Removal and Replacement - 12"	LF	
42	Storm Sewer Pipe, PVC SDR 26 - 12"	LF	
43	Storm Sewer Pipe, PVC SDR 21 - 12"	LF	
44	Storm Sewer Pipe, RCP Class 3 Removal and Replacement- 12"	LF	
45	Storm Sewer Pipe, RCP Class 4 Removal and Replacement- 10"	LF	
46	Storm Sewer Pipe, RCP Class 4 Removal and Replacement- 12"	LF	
47	Storm Sewer Pipe, RCP Class 3 Removal and Replacement - 15"	LF	
48	Storm Sewer Pipe, RCP Class 4 Removal and Replacement - 15"	LF	
49	Abandon Storm Sewer Pipe - Fill with Flowable Fill	CY	
50	Storm Sewer Pipe Removal	LF	
	TOTAL		

Parking Lot "H"

No.	Description	Unit	QTY
1	Remove & Replace Fire Hydrant, Aux. Valve Box & Install Stabilizer	EA	
2	Remove & Replace 6" Auxilliary Valve, 5-1/4" Box & Install Stabilizer	EA	
3	Remove & Replace B-Box in Driveway or Sidewalk	EA	
4	Reset 5-1/4" Auxiliary Valve Box & Install Stabilizer	EA	
5	Replace 5-1/4" Auxiliary Valve Box & Install Stabilizer	EA	
6	Replace 5-1/4" Valve Box in Pavement & Install Stabilizer	EA	
7	Replace Valve Box with Valve Vault (I.D.-48")	EA	
8	Reset Valve Vault Frame - in Sidewalk	EA	
9	Remove & Replace Frame & Lid in Pavement	EA	
10	Remove & Replace 6" Valve & Valve Vault (I.D.-48")	EA	
11	Remove 12" Valve & Valve Vault (I.D.-48") - Cut Main & Cap Tee	EA	
12	Lower 4" Class 52 Ductile Iron Water Main	LF	
13	10" Ductile Iron Water Main - Casing Pipe	LS	
14	Remove & Replace Sanitary Manhole (I.D.-48")	EA	
15	Sanitary Manhole Chimney Seal	EA	
16	Remove & Replace Frame & Lid in Pavement	EA	
17	Sanitary Sewer Pipe Removal and Replacement - 8"	LF	
18	Sanitary Sewer Pipe Removal and Replacement - 10"	LF	
19	Sanitary Manholes to be Reconstructed	EA	
20	Sanitary Sewer Service Removal and Replacement 6"	LF	
21	Remove and Replace Storm Manhole (I.D.-48"), w/ 48" Dia. Manhole	EA	
22	Remove and Replace Storm Structure (I.D.-48"), w/ 36" Dia. Catch Basin	EA	
23	Remove and Replace Storm Structure (I.D.-36"), w/ 36" Dia. Catch Basin	EA	
24	Remove and Replace Storm Structure (I.D.-24"), w/ 48" Dia. Manhole	EA	
25	Remove and Replace Catch Basin, Type "C" - 24" Dia. w/ 2' Sump	EA	
26	Abandon Existing Storm Structure	EA	
27	48" Dia. Storm Manhole in Pavement	EA	
28	48" Dia. Storm Manhole in Parkway	EA	
29	Remove and Replace Inlet, Type "A" - 24" Dia.	EA	
30	Inlet, Type "A" - 24" Dia.	EA	
31	Reset Manhole Frame in Pavement	EA	1
32	Reset Frame in Curb	EA	
33	Remove & Replace Frame & Lid in Curb	EA	
34	Remove & Replace Frame & Lid in Pavement	EA	
35	Remove & Replace Frame in Parkway	EA	
36	Storm Sewer Service, PVC SDR 26, 6"	LF	
37	Storm Sewer Pipe, PVC SDR 21 - 10"	LF	
38	Storm Sewer Pipe, PVC SDR 26, Removal and Replacement - 10"	LF	
39	Storm Sewer Pipe, PVC SDR 26, Removal and Replacement - 12"	LF	
40	Storm Sewer Pipe, PVC SDR 21, Removal and Replacement - 10"	LF	
41	Storm Sewer Pipe, PVC SDR 21, Removal and Replacement - 12"	LF	
42	Storm Sewer Pipe, PVC SDR 26 - 12"	LF	
43	Storm Sewer Pipe, PVC SDR 21 - 12"	LF	
44	Storm Sewer Pipe, RCP Class 3 Removal and Replacement- 12"	LF	
45	Storm Sewer Pipe, RCP Class 4 Removal and Replacement- 10"	LF	
46	Storm Sewer Pipe, RCP Class 4 Removal and Replacement- 12"	LF	
47	Storm Sewer Pipe, RCP Class 3 Removal and Replacement - 15"	LF	
48	Storm Sewer Pipe, RCP Class 4 Removal and Replacement - 15"	LF	
49	Abandon Storm Sewer Pipe - Fill with Flowable Fill	CY	
50	Storm Sewer Pipe Removal	LF	
	TOTAL		

Public Works - Parking Lot

No.	Description	Unit	QTY
1	Remove & Replace Fire Hydrant, Aux. Valve Box & Install Stabilizer	EA	
2	Remove & Replace 6" Auxilliary Valve, 5-1/4" Box & Install Stabilizer	EA	
3	Remove & Replace B-Box in Driveway or Sidewalk	EA	
4	Reset 5-1/4" Auxiliary Valve Box & Install Stabilizer	EA	
5	Replace 5-1/4" Auxiliary Valve Box & Install Stabilizer	EA	
6	Replace 5-1/4" Valve Box in Pavement & Install Stabilizer	EA	
7	Replace Valve Box with Valve Vault (I.D.-48")	EA	
8	Reset Valve Vault Frame - in Sidewalk	EA	
9	Remove & Replace Frame & Lid in Pavement	EA	2
10	Remove & Replace 6" Valve & Valve Vault (I.D.-48")	EA	
11	Remove 12" Valve & Valve Vault (I.D.-48") - Cut Main & Cap Tee	EA	
12	Lower 4" Class 52 Ductile Iron Water Main	LF	
13	10" Ductile Iron Water Main - Casing Pipe	LS	
14	Remove & Replace Sanitary Manhole (I.D.-48")	EA	
15	Sanitary Manhole Chimney Seal	EA	1
16	Remove & Replace Frame & Lid in Pavement	EA	1
17	Sanitary Sewer Pipe Removal and Replacement - 8"	LF	
18	Sanitary Sewer Pipe Removal and Replacement - 10"	LF	
19	Sanitary Manholes to be Reconstructed	EA	
20	Sanitary Sewer Service Removal and Replacement 6"	LF	
21	Remove and Replace Storm Manhole (I.D.-48"), w/ 48" Dia. Manhole	EA	
22	Remove and Replace Storm Structure (I.D.-48"), w/ 36" Dia. Catch Basin	EA	
23	Remove and Replace Storm Structure (I.D.-36"), w/ 36" Dia. Catch Basin	EA	
24	Remove and Replace Storm Structure (I.D.-24"), w/ 48" Dia. Manhole	EA	
25	Remove and Replace Catch Basin, Type "C" - 24" Dia. w/ 2' Sump	EA	
26	Abandon Existing Storm Structure	EA	
27	48" Dia. Storm Manhole in Pavement	EA	
28	48" Dia. Storm Manhole in Parkway	EA	
29	Remove and Replace Inlet, Type "A" - 24" Dia.	EA	
30	Inlet, Type "A" - 24" Dia.	EA	
31	Reset Manhole Frame in Pavement	EA	5
32	Reset Frame in Curb	EA	
33	Remove & Replace Frame & Lid in Curb	EA	
34	Remove & Replace Frame & Lid in Pavement	EA	
35	Remove & Replace Frame in Parkway	EA	
36	Storm Sewer Service, PVC SDR 26, 6"	LF	
37	Storm Sewer Pipe, PVC SDR 21 - 10"	LF	
38	Storm Sewer Pipe, PVC SDR 26, Removal and Replacement - 10"	LF	
39	Storm Sewer Pipe, PVC SDR 26, Removal and Replacement - 12"	LF	
40	Storm Sewer Pipe, PVC SDR 21, Removal and Replacement - 10"	LF	
41	Storm Sewer Pipe, PVC SDR 21, Removal and Replacement - 12"	LF	
42	Storm Sewer Pipe, PVC SDR 26 - 12"	LF	
43	Storm Sewer Pipe, PVC SDR 21 - 12"	LF	
44	Storm Sewer Pipe, RCP Class 3 Removal and Replacement- 12"	LF	
45	Storm Sewer Pipe, RCP Class 4 Removal and Replacement- 10"	LF	
46	Storm Sewer Pipe, RCP Class 4 Removal and Replacement- 12"	LF	
47	Storm Sewer Pipe, RCP Class 3 Removal and Replacement - 15"	LF	
48	Storm Sewer Pipe, RCP Class 4 Removal and Replacement - 15"	LF	
49	Abandon Storm Sewer Pipe - Fill with Flowable Fill	CY	
50	Storm Sewer Pipe Removal	LF	
	TOTAL		

2014 Street Resurfacing Project — **Contractor Copy - Estimate of Quantities per Location**

1/27/2014

Roadways

#	BASE BID			Pavement Measured Length-ft	EOP-EOP FT	Area S.Y.	9" PCC Pv Removal SY	13.75" P & B (New) Removal SY	Removal and Disposal of Unsuitable Material Removal CY	Earth Excavation (4") Removal CY	Ground Stabilization Fabric Placement SY	Porous Granular Embankment Placement CY	8" PCC Pavement SY	2" Pvm't Removal SY	3"-3.5" Pvm't Removal SY	5" Subbase granular Material, Type B Base CY	6" Bit.Base Course TON	2.25" Bit. Binder C. TON	2" Bitum Surface C. TON	1.5" Bitum Surface C. TON	Class B Patching	Class D Patching SY	C & G R&R LF	C & G New LF	Bituminous Driveway SY	PCC Driveway SY	Sidewalk Removal SF	Sidewalk Remove & Replace SF	Sod SY
1	Ohio Ave.	S. 6th Ave.	S. 5th Ave.	336.2	20	747	747		100		747	100	747			104							75					215	86
2	Ohio Ave.	S. 5th Ave.	S. 4th Ave.	257.9	20	573	573		100		573	100	573			80							88		27			660	114
3	Ohio Ave.	S. 4th Ave.	S. 3rd Ave.	261.0	20	580	580		100		580	100	580			81					80	50.0	133			53		452	61
4	Frontage Road	38th Ave.	West End	1,091.0	22	2667									2667			336		224		267.0	414			208	35	365	135
5	McKinley St.	S. 5th St.	S. 6th St.	336.1	24.5	915								915					102			50.0	196		15	13			201
6	McKinley St.	S. 4th St.	S. 5th St.	315.9	24.5	860								860					96			50.0	62		16			150	72
7	Kehoe Drive	S. 8th St.	Horne St.	1,269.5	28.5	4020									4020			507		338		402.0	898		192	198	220	2220	394
8	Alice Court	Kehoe Drive	South CDS	253.9	28.5	804									804			101		68		80.0	132		86	33		150	56
9	Margaret Court	Kehoe Drive	South CDS	378.9	28.5	1200									1200			151		101		120.0	160		108	39		325	73
10	Cumberland Green Dr.	Cumberland Pkwy	Cambridge Dr.	921.5	28.5	2918								2918					327				176		38	242		830	99
11	Cambridge Dr.	Cumberland Pkwy	S. Tyler Road	2,768.5	28.5	8767								8767					982				429		407		215	2640	312
12	Midway Dr.	Cambridge Dr.	Jeanette Ave.	279.2	24.5	760								760					85									40	2
13	Jeanette Ave.	Cambridge Dr.	S. Tyler Road	2,277.6	24.5	6200								6200					694				449		426	29	45	895	209
14	Foxfield Drive	Kirk Road	Fox Chase Drive	1,231.8	36	4927								4927					552				208				155	1130	106
15	Ash Street	Roosevelt St.	Horne St	1,319.5	24.5	3592								3592					402				779		134	111			230
16	Squire Lane	Dunham Road	West End CDS	1,210.4	28.5	3833								3833					429				293		93				90
17	Lakeside Drive	Route 64	South End	219.1	47	1144									1144			144		96		82.1							
18	Alley - Cutler to Horne	Cutler St.	Horne St.	937.5	12	1250									1250			158		105		89.7							
19	Alley - Horne to McKinley	Horne St.	McKinley St.	384.0	12	512									512			65		43		36.7							
20	Parking Lot H	Route 31	State Street			1861									1861			234		156		133.5							
21	Public Works Facility Parking Lot					4600									4600			580		386		330.1							

Concrete Roads Converted to Asphalt

NONE

SUPPLEMENTAL

Prime Coat Application = 0.25-0.50 gals per SY		12386	GAL
Aggregate (Prime Coat) = 4 - 6 lb/SY (Ton)		90	TON

Various Patch Location throughout town

Walk	350	S.F.
Curb	300	L.F.

Thermoplastic Striping	
4"	2910
6"	895
12"	120
24"	135
Arrow/Only	280
Loop Detectors (LF)	380
Traffic Control (LS)	1
Mobilization (LS)	1