AGENDA
CITY OF ST. CHARLES, IL
GOVERNMENT SERVICES COMMITTEE MEETING
RONALD SILKAITIS, CHAIRMAN

MONDAY, SEPTEMBER 28, 2020, 7:00 P.M
CITY COUNCIL CHAMBERS
2 E. MAIN STREET, ST. CHARLES, IL 60174

1. CALL TO ORDER

2. ROLL CALL

3. ADMINISTRATIVE

a. Electric Reliability Report – Information only.

b. Natural Resources Commission Minutes – Information only.

4. OMNIBUS VOTE

Items with an asterisk (*) are considered to be routine matters and will be enacted by one motion. There will be no separate discussion on these items unless a council member/citizen so requests, in which event the item will be removed from the consent agenda and considered in normal sequence on the agenda.

5. PUBLIC WORKS DEPARTMENT

a. Recommendation to award the Bid for the 2020 Asphalt Patching Program.

b. Recommendation to award the Bid to Delta Star for Transformer Replacement at Substation 6.

c. Recommendation to award the Bid for Substation 3 12kV Bus Extension Structure Project.

d. Recommendation to Waive the Formal Bid Procedure and approve a Professional Service Agreement for the Lead Line Replacement Program.

e. Recommendation to approve Professional Service Agreement for the Riverside Lift Station.

f. Recommendation to award the Bid for City Sanitary Sewer Root Control Program.

g. Recommendation to approve Addendum for Professional Service Agreement for the Westside Wastewater Treatment Plant Expansion.

h. Recommendation to award Proposal for Sanitary Manhole Rehabilitation Bid and Construction Oversight.

i. Recommendation to approve Consultant Contract for Phase II Design of the Widening and Reconstruction of Kautz Road.

***j.** Recommendation to Waive the Formal Bid Procedure and approve a Construction Contract for Pavement Repairs to Fairview Drive.

***k.** Recommendation to approve the Sale of Items of Personal Property Owned by the City of St. Charles via an Online Auction to the Highest Bidder.

***l.** Recommendation to Amend Exhibit "PL-A" of Chapter 10.40.010 of the City Code to reflect changes to the parking configuration of Municipal Parking Lot "A".

***m.** Recommendation to approve a Resolution Authorizing Application to the Illinois Transportation Enhancement Program Grant Opportunity.

6. POLICE DEPARTMENT

a. Recommendation to approve a Contract with VirTra Training Simulators for an Annual Subscription Training and Equipment Partnership Agreement for the St. Charles Police Department.

7. EXECUTIVE SESSION

- Personnel –5 ILCS 120/2(c)(1)
- Pending Litigation – 5 ILCS 120/2(c)(11)
- Probable or Imminent Litigation – 5 ILCS 120/2(c)(11)
- Property Acquisition – 5 ILCS 120/2(c)(5)
- Collective Bargaining – 5 ILCS 120/2(c)(2)
- Review of Executive Session Minutes – 5 ILCS 120/2(c)(21)

8. ADDITIONAL ITEMS FROM MAYOR, COUNCIL, STAFF OR CITIZENS

9. ADJOURNMENT

ADA Compliance

Any individual with a disability requesting a reasonable accommodation in order to participate in a public meeting should contact the ADA Coordinator, Jennifer McMahon, at least 48 hours in advance of the scheduled meeting. The ADA Coordinator can be reached in person at 2 East Main Street, St. Charles, IL, via telephone at 630 377 4446 or 800 526 0844 (TDD), or via e-mail at jmcmahon@stcharlesil.gov. Every effort will be made to allow for meeting participation. Notices of this meeting were posted consistent with the requirements of 5 ILCS 120/1 et seq. (Open Meetings Act).

ST. CHARLES SINCE 1834	**AGENDA ITEM EXECUTIVE SUMMARY**	Agenda Item number: 3.a
	Title:	Electric Reliability Report – Information Only
	Presenter:	Paul Hopkins

Meeting: Government Services Committee	Date: September 28, 2020	
Proposed Cost: $	Budgeted Amount: $	Not Budgeted: ☐

Executive Summary (*if not budgeted please explain*)**:**

For Information Only.

Attachments (*please list*)**:**

August 2020 Outage Report
August 2020 Streetlight Repair Report

Recommendation/Suggested Action (*briefly explain*)**:**

For information only.

City of St. Charles
August 2020 Outages

OUTAGE No.	DATE	TIME OFF	TIME ON (Min)	AREA AFFECTED	CIRCUIT No.	CAUSE/RESPONSE	NO. OF CUST.	OUTAGE MINUTES	MAJOR CATEGORY	SUB CATEGORY
1	8/10/2020	3:22 PM	55	Along west side of river, from Red Gate to Gray St., west to Peck, between Gray St. and Wildrose Springs Dr.	57736	Outage. Loss of ComEd supply. Isolated 57736 and picked up load on line 56931.	1676	92,180	ComEd	57736
1	8/10/2020	3:22 PM	100	River's Edge and Wildrose Springs subdivisions.	57736	Outage. Loss of ComEd supply. Closed from LDC2	300	30,000	ComEd	57736
1	8/10/2020	3:22 PM	100	Along old railroad tracks, from 12th St. to 5th St.	57736	Outage. Loss of ComEd supply. Energized from sub 2.	150	15,000	ComEd	57736
1	8/10/2020	3:22 PM	153	Along tracks from Randall to sub 2.	57736	Outage. Loss of ComEd supply. Picked up from sub 2.	100	15,300	ComEd	57736
1	8/10/2020	3:22 PM	165	From tracks to Rt. 64, along Peck Rd.	57736	Outage. Loss of ComEd supply. Closed from circuit 811.	158	26,070	ComEd	57736
1	8/10/2020	3:22 PM	323	Timbers subdivision.	224	Trees on circuit 224.	170	54,910	Tree	Large Branch/Tree
2	8/10/2020	4:09 PM	0	Along the east side of the river to 5th Ave. from Red Gate Rd. to Rt. 64.	7962	Outage. Loss of ComEd supply. Auto reclose.	2674	0	ComEd	7962
3	8/12/2020	4:22 PM	4	Along old railroad tracks, from 13th Ave. to S. Tyler Rd. and south along S. Tyler Rd.	316	Outage. Shut off power to remove tree from lines. Removed tree and restored power.	25	100	Tree	Large Branch/Tree
4	8/15/2020	4:57 PM	0	Near Main St., from 5th Ave. to 14th St.	7962	Outage. Loss of ComEd during wind/rain storm. Automatic reclose.	2724	0	ComEd	7962
5	8/21/2020	9:27 AM	0	South of Main St., Kautz & S. Tyler Rd.	13155	Outage. Loss of ComEd - animal. Automatic reclose.	696	0	ComEd	13155
6	8/24/2020	8:30 AM	0	From Dean St. to Main St., between Randall Rd. and 7th St., Thornwood and Oak Crest subdivisions.	222	Outage. Unknown cause. Automatic reclose.	632	0	Unknown	12.47-kV
7	8/24/2020	2:50 PM	350	800 block of Thornwood Circle, 1930 Dean St.	222	Outage. Transformer failure. Replaced transformer and restored power.	16	5,600	Equipment	Transformer Failure
8	8/29/2020	8:58 AM	66	Between Ash St. and 2nd St., from Horne St. to McKinley St.	331	Outage. Squirrel took out transformer fuse. Replaced fuse, restored power, and removed squirrel.	15	990	Animal	Squirrel
						Total of Interrupted Minutes		**240,150**		
						Total SAIDI*	**15.321**			
						Total of ComEd Interrupted Minutes		**178,550**		
						Total SAIDI without ComEd	**3.930**			
						*System Average Interruption Duration Index (SAIDI)				

Streetlight Repair Report

Expectation: Streetlights will be repaired within 10 days of notification.

Fiscal Year	Number of Lights Repaired	Average Days to Repair
2020	781	6.9

2021

Month Light Was Repaired	Number of Lights Repaired	Average Days to Repair
May	22	9.8
June	17	4.4
July	18	3.8
August	29	4.5

ST. CHARLES SINCE 1834	**AGENDA ITEM EXECUTIVE SUMMARY**	Agenda Item number: 3.b
	Title:	Natural Resources Commission Minutes – Information only
	Presenter:	AJ Reineking

Meeting: Government Services Committee Date: September 28, 2020

Proposed Cost: $ n/a	Budgeted Amount: $	Not Budgeted: ☐

Executive Summary (*if not budgeted please explain*)**:**

A duty of the Natural Resources Commission is to advise and consult with the Government Services Committee. The August 13, 2020 Natural Resources Commission meeting minutes are attached.

Attachments (*please list*)**:**

* Natural Resources Commission Minutes – August 2020 meeting minutes.

Recommendation/Suggested Action (*briefly explain*)**:**

For information only.

MINUTES
CITY OF ST. CHARLES
NATURAL RESOURCES COMMISSION MEETING
RALPH GRATHOFF, CHAIRMAN
AUGUST 13, 2020

Members Present: Tom Galante, Heather Goudreau, Ralph Grathoff, Suzi Myers, Pam Otto, Bryan Wirball. Present via WebEx: Ryan Johnson, Loren Nagy.

Members Absent: Kathy Brens, Angela Churchill, Lee Haggas.

Others Present: Marcelline D'Argento, AJ Reineking.

Visitors Present: None.

1. Call to Order & Pledge of Allegiance

The meeting was convened by Chair. Grathoff at 7:03 p.m.

2. Minutes Review and Approval

Motion to approve and place into the public record the minutes of the July 9, 2020 Natural Resources Commission [NRC] meeting. Motion by Comm. Myers, second by Comm. Goudreau to approve the minutes. Voice vote: unanimous; nays – none. Motion carried at 7:05 p.m.

3. Old Business

A. Greenest Region Compact II

Mr. Reineking reported on behalf of intern Jack Jordan [absent] regarding Mr. Jordan's discussion with Abby Beck, an alderwoman with the City of Batavia and former member of the Batavia Environmental Commission. The Batavia Commission condensed the information in the Greenest Region Compact [GRC] spreadsheet and presented it graphically to the Batavia City Council as a means to illustrate where Batavia had made progress and where additional work could be done. The Batavia Commission also developed a set of yearly sustainability goals. The presentation and goals may be viewed at: http://cityofbatavia.net/AgendaCenter/ViewFile/Item/11983?fileID=8545. The NRC may consider making a similar presentation to the St. Charles City Council.

B. Student Commissioners

Chair. Grathoff inquired as to the status of the NRC Student Commissioners. Ms. D'Argento reported all of the Student Commissioners resigned from the NRC in July as they have graduated from high school and will be attending college out of state. The Commissioners noted the positive contributions made by the students and the value of having students serve on the NRC.

There are four open positions for high school and/or college Student Commissioners. Comm. Goudreau stated she would contact the high schools' Eco Clubs, and Comm. Myers suggested the NRC also contact high school department chairpersons to fill the openings. Comm. Wirball stated he would speak to the St. Charles District 303 School Board in his capacity as a member of the district's Citizen's Advisory Committee.

4. New Business

A. Open Meetings Act Training

Ms. D'Argento informed the NRC that all members of the city's Boards and Commissions are required to complete Open Meetings Act training. The training is done through the Illinois Attorney General's website, and Certificates of Completion should be submitted to the city as soon as training is completed.

5. Committee Reports

A. Education Committee

Comm. Myers reviewed the upcoming articles the Commissioners are writing for *The Den*.

B. Langum Woods Clean-Up Committee

None.

C. New Committee

Comm. Goudreau reported the second annual NRC-sponsored pumpkin collection is scheduled for Saturday, November 7, 2020. Dumpsters will be obtained from Lakeshore Recycling Services, and signage made by Public Works for last year's event will be re-used.

D. Single-Use Bag Committee

Comm. Nagy reported on an initiative by the Illinois Environmental Council [IEC] requesting signatories on a letter to the Governor of Illinois to lift the restrictions on reusable bags. A copy of the letter is attached to and made a part of these minutes. Earlier this year, as part of its response to the pandemic, the State of Illinois directed retailers to discontinue the use of reusable bags. The basis of the IEC request to resume use of reusable bags as stated in the letter is: "no evidence exists of virus transmission from surfaces…" Comm. Nagy inquired as to whether the NRC could be among the signatories of the letter. Staff noted the NRC has an advisory role to the city's Government Services Committee [GSC], and the IEC letter would be discussed with the Asst. Director of Public Works, who interfaces with the GSC.

6. Public Services Division Tree Activity Reports

Motion to approve and place into the public record the Public Services Division Tree Activity Reports for the months of June and July 2020. Motion by Comm. Myers, second by Comm. Galante to approve the reports. Voice vote: unanimous; nays – none. Motion carried at 7:22 p.m.

7. Additional Items

A. Commissioners

Chair. Grathoff acknowledged the dedicated service of former NRC Commissioner Caroline Wilfong, who recently resigned upon the expiration of her term. Comm. Wilfong was a member of the Tree Commission and NRC for several years, and was involved in planning and photographing the city's Arbor Day celebrations, among her many other contributions to the NRC. All present acknowledged Comm. Wilfong's service to the city, the Tree Commission and the NRC.

B. City Staff

None.

8. Adjournment

Motion to adjourn the meeting. Motion by Comm. Otto, second by Comm. Goudreau to adjourn the meeting. Voice vote: unanimous; nays – none. Motion carried at 7:25 p.m.

CITY OF ST. CHARLES ILLINOIS • 1834	**AGENDA ITEM EXECUTIVE SUMMARY**	**Agenda Item Number:** 5.a
	Title:	Recommendation to award the Bid for the 2020 Asphalt Patching Program
	Presenter:	AJ Reineking

Meeting: Government Services Committee **Date**: September 28, 2020

Proposed Cost: $147,200	Budgeted Amount: $170,000	Not Budgeted: ☐

Executive Summary (*if not budgeted please explain*)**:**

On August 27, 2020, 6 bids were submitted via the eProcurement platform for the 2020 Asphalt Patching Program. Similar to the 2018 and 2019 programs, the 2020 program will consist of just over 8,000 yards of patch material. The program traditionally has alternated between the east and west sides of the community. The 2019 program focused heavily on the east side and the 2020 program will, in turn, target the west side of the City.

The bid calls for a 2" grind and overlay of the roadway at each location. This program will be performed in conjunction with the City's in-house roadway maintenance program, which predominantly focuses on smaller repairs or repairs completed in conjunction with utility work.

The City received six (6) bids to complete this work with J.A. Johnson Paving Co of Arlington Heights IL being the lowest responsive, responsible bidder.

J.A. Johnson Paving Co is a large company in the area. They have done work and provided asphalt material for the City in the past, and performed adequately.

Attachments (*please list*)**:**

*Bid Tabulation

Recommendation/Suggested Action (*briefly explain*)**:**

Recommendation to award the bid for the 2020 Asphalt Patching Program to J.A. Johnson Paving Co in the submitted bid amount of $18.40 per square yard of material replaced.

2020 ASPHALT PATCHI		Brothers Asphalt Paving, Inc.		Builders Paving, LLC		Chicagoland Paving Contractors		Geneva Construction Co.		J.A. JOHNSON PAVING CO		Schroeder Asphalt Services	
Unit of Measure	**Qty**	**Unit Price**	**Extended Price**	**Unit Price**	**Extended Price**	**Unit Price**	**Extended Price**	**Unit Price**	**Extended Pric**	**Unit Price**	**Extended Price**	**Unit Price**	**Extended Pric**
per square yard	8000	$20.62	$164,960.00	$27.00	$216,000.00	$19.50	$156,000.00	$21.10	$168,800.00	$18.40	$147,200.00	$18.49	$147,920.00
Total price			**$164,960.00**		**$216,000.00**		**$156,000.00**		**$168,800.00**		**$147,200.00**		**$147,920.00**

Lowest price	**By**	**Distance to no. 2 in %**
$147,200.00	J.A. JOHNS	0.49%
$147,200.00		

	AGENDA ITEM EXECUTIVE SUMMARY	**Agenda Item Number:** 5.b
	Title:	Recommendation to award the Bid to Delta Star for Transformer Replacement at Substation 6
	Presenter:	Paul Hopkins

Government Services Committee	**Date:** September 28, 2020	
Proposed Cost: $ 701,390	Budgeted Amount: $ 800,000	Not Budgeted: ☐

Transformer (6T2) is to replace the current transformer which is 40 years old (built in 1981) and which has a rusting base. Substation 6, located at Prairie Street, north of 14th Street, serves the Southwest quadrant of the City and is the only substation within the City's Electric Utility that does not have a direct 34 kV circuit feeding into it, and consequently it is important to have two viable substation transformers operating to enable load sharing within the station and through the City's transmission network.

Attachments :

*Bid Comparison *Suppliers List for Transformer Replacement REBID
*Negometrix 3 Invitation to Bid *Bidder References Evaluation *Electric Engineering Bid Evaluation

Recommendation/Suggested Action:

Recommendation to award the bid to Delta Star for Transformer Replacement at Substation 6 in the amount of $701,390.

Company Name	Contact person	Invitation sent
-	tlubniewski@tdproducts.com	Jun 16 2020 8:57 AM
MC Sales INc	matt.g@mcsalesinc.com	Jun 16 2020 8:57 AM
-	rfq@deltastar.com	Jun 16 2020 8:57 AM
-	sectodd@sbcglobal.net	Jun 16 2020 8:57 AM
-	jimc@pwrone.com	Jun 16 2020 8:57 AM
ELECTROTECNICA ARTECHI	gonzalo.setien@arteche.com	Jun 16 2020 8:57 AM
Fleming Electric Inc.	erinsmith@flemingelectric.us	Jun 16 2020 8:57 AM
PTTI	kkaranza@patransformer.com	Jun 16 2020 8:57 AM
Virginia Transformer	tom_aikens@vatransformer.co	Jun 16 2020 8:57 AM
Advanced Electrical Resources	swilson@aers1.com	Jun 16 2020 8:57 AM
-	mpickering@howard-ind.com	Jun 16 2020 8:57 AM

Sent by	Status updated	Status
jschouten@stcharlesil.gov	-	Invited
jschouten@stcharlesil.gov	-	Invited
jschouten@stcharlesil.gov	-	Invited
jschouten@stcharlesil.gov	-	Invited
jschouten@stcharlesil.gov	-	Invited
jschouten@stcharlesil.gov	-	Invited
jschouten@stcharlesil.gov	-	Invited
jschouten@stcharlesil.gov	-	Invited
jschouten@stcharlesil.gov	-	Invited
jschouten@stcharlesil.gov	-	Invited
jschouten@stcharlesil.gov	-	Invited

Participant
-
Yes
-
-
-
No
No
No
Yes
Yes
-

			e-mail request	Reply		doc attached	Xfmr age	Reccommend		Notes	Grade
	Person	**Company**		**by phone**	**by email**			**Yes**	**No**		
Virginia Transformer	Blair Davis (Hunter Allen)	Athens Utilities	7/31/2020	X	X	X	7	X		Serious problems	1
	Ross Aten	Lyntegar Electric Coop	7/31/2020		N/A						
	WM. Kim Hensley	Huntsville Utilities	7/31/2020		X	X	17	X		Some problems	3
	Doug Lunkenbil	KCPL	7/31/2020		N/A						
	Nate Burns	Lane-Scott Electric Coop	7/31/2020		X	X	6	X			3
	Bruce Webb	Knoxville Utilities (Delta Star Ref)	8/3/2020	X		X	N/A		X	Has only 2 VT's	1
	Brian Groth	Naperville	3/13/2020	X		X			X	Only troubles	1
											1.8
		Notes: VT quote does not include travel to factory testing - maybe they don't want us there....									
WEG	Patrick Wright	Exelon/Comed	8/4/2020		X	X	12	X		Leaks	4
	Paul Mushill	Ameren	8/4/2020		X	X	4	X			4
	Chris Baumgartner	WE Energies	8/4/2020		X	X	5	X		Leaks	3
	Fred Ipock	City Utilities of Springfield Missouri	8/4/2020		X	X	3	X		gauge problem	4
	Dan Andrekus	Alliant Energy	8/4/2020		X	X	2	X			4
											3.8
Delta Star	Bruce Webb	Knoxville Utilities Board	8/4/2020	X		X	20	X		crimp problem	4
	Samuel Wilson	Rappahannock Electric	8/4/2020		X	X	30+	X			5
	Simon Meilstrup	Cloverland Electric Coop	8/4/2020		X	X	20	X		All positive	5
	Jeffrey Gragert	Xcel Energy	8/4/2020		X	X	N/A	X		All positive	5
	Ray Cimuca	Arkansas Electric Coop	8/4/2020				N/A				
											4.75

Transformer 6T2 is to replace the current transformer which is 40 years old (built in 1981) and has an ominous rust spot on the bottom.

The transformer serves residential load to customers on the South West side of town.

The city has received 6 bids as shown in the spreadsheet *Bid compare.xlsx*. The lowest bidder was Virginia Transformer at an initial cost of $535,577.00 with a lifetime cost of $868,163.40. Virginia took no exception to the technical part of the specification, but when repeatedly pressed to provide documentation that they can comply with the RV winding spec and the coil sizing requirement. Virginia sent this email:

Sittler, Erika

From:	Brian McCarrick <Brian_McCarrick@vatransformer.com>
Sent:	Monday, August 10, 2020 4:17 PM
To:	Sittler, Erika
Cc:	Ed Kometscher
Subject:	RE: Follow up on transformer clarifications / M202501A - St Charles
Attachments:	Approved Drgs_FormerTron_7.13.20.pdf

Erika,

VTC-Roanoke factory included iso-static coil sizing in our proposal without exception as we have the equipment on order for installation at VTC-Roanoke later this year and your unit would be produced in 2021 with the new iso-static coil sizing equipment; attached is the approval drawing of the iso-static coil sizing equipment we have on order to ship later this month and confirmed we will be utilizing on your unit (should VTC be successful in award of project). Further, VTC takes pictures throughout the manufacturing process and so can provide pictures of your units' fully distributed helical RV winding and iso-static coil sizing during the manufacturing process and provide photos to provide complete evidence that specifications were indeed met. Please let me know if any questions. Thank you and have a great afternoon!

Sincerely,

Brian McCarrick
Regional Sales Manager
Virginia Transformer – Georgia Transformer
Mobile: 540-581-2825
Office: 540-682-5229
E-Mail: Brian_McCarrick@vatransformer.com
http://www.vatransformer.com

VIRGINIA - GEORGIA TRANSFORMER
ONE SOURCE–ONE COMMITMENT

In the email above VT states that they do not yet have the sizing equipment that would be required to build the specified transformer. Since the email above was sent to me in the 11th hour after not taking exception to the spec and only after being pressed to show us a picture of their sizing equipment Virginia Transformer appeared to be dishonest. The City took the email above as taking exception to the isostatic coil sizing and rejected Virginia's bid.

In addition, after checking the references that were provided by VT and also checking with a few other utilities that own Virginia transformers, the consensus is that the transformers built by VT are generally low quality. Please see the spreadsheet *Ref compare.xlsx*.

The second lowest bid came from WEG at $600,600.00, similarly to VT, when pressed to show proof (in the form of pictures) that they are able to meet the Regulator Winging and isostatic coil sizing spec, the following email was sent in the 11th hour after WEG has repeatedly assured me that they will meet the spec:

Sittler, Erika

From: jimc@pwrone.com
Sent: Wednesday, August 12, 2020 11:18 AM
To: Sittler, Erika
Subject: Fwd: St Charles transformer bid
Attachments: RV Windings.pdf; ATT00001.htm

Erika,

Please attached.

Best Regards,
Jim Chaggaris
PowerOne Corp.
Cell 630.669.2241

Begin forwarded message:

> **From:** Andrew L Kassebaum <akassebaum@weg.net>
> **Date:** August 12, 2020 at 11:12:59 AM CDT
> **To:** Jim Chaggaris <jimc@pwrone.com>
> **Cc:** Cheryl Basel <cbasel@weg.net>, Alexander Crews <acrews@weg.net>
> **Subject: RE: St Charles transformer bid**
>
> Good Afternoon,
>
> The original proposal is designed with a tapped helical regulation winding. We consider this a fully distributed winding as it has magnetic symmetry across all taps. We can change the design to a Multistart regulation winding which also has magnetic symmetry. This would be an adder of $39,800.
>
> Attached is a brief comparison of the 2 windings.
>
> Note to Jim: The price adder includes the cost of the design changes as well as the additional losses.
>
> Best Regards,
>
> **Andrew Kassebaum**
> Sales & Marketing
> Phone: +1 (636) 239 9388
> **WEG Transformers USA**
> One Pauwels Drive, Washington Missouri 63090, USA

By industry standards the tapper regulation winding is not fully distributed. WEG does offer another winding in the email but for an up price of $39,800. This appeared to be dishonest and did not meet the spec, so WEG was eliminated.

The next low bidder was from Advanced Electrical Resources quoting a Delta Star transformer. The bid had no exceptions and Delta Star transformers appear to be highly reliable as was the testimony from all the references that they provided. Please see the *Ref compare.xlsx* spreadsheet.

	AGENDA ITEM EXECUTIVE SUMMARY	**Agenda Item Number:** 5.c
	Title:	Recommendation to award the Bid for Substation 3 12 kV Bus Extension Structure Project
	Presenter:	Paul Hopkins

Government Services Committee	**Date**: September 28, 2020	
Proposed Cost: $ 380,644.00	Budgeted Amount: $ 395,000.00	Not Budgeted: ☐

Electric Substation 3 is located in the downtown near the Municipal Building at the end of N. Riverside Ave. Currently, many of the 12kV circuits which feed the downtown area through Substation 3 are overcrowded on circuit breakers due to Bus space restrictions. This project will provide the extra needed Bus space to eliminate this problem and therefore reducing the risk for outages.

The Bus Extension Structure was competitively bid. The circuit reclosers inside the Bus Extension Structure were sole sourced maintaining consistency with City standard equipment.

Attachments:

*Bid Results for Bus Extension Structure *Sole Source Quotation for Circuit Reclosers *Bid Waiver for Circuit Reclosers

Recommendation/Suggested Action:

Recommendation to award bid for Substation 3 12kV Bus Extension Structure Project to V & S Schuler in the amount of $269,894 and the required Eaton sole source circuit reclosers to Border States in the amount of $110,750.

Hi Paul,

For the Substation 3 structure work the city received 2 bids:

From Power 1 (Jim Chaggeris) Substation Enterprises was - $375,000

From V&Sschuler the bid was - $269,894

V&Sschuler provided us with the structure for substation 9, so we are familiar with the work that they do. So, we would like to buy the parts from them.

This one is easy, the low bidder is also the company that we are familiar with and have worked with. Please let me know if you need any more information on this bid.

Erika

Erika Sittler | Electric Transmission & Substation Engineer
2 E. Main Street, St. Charles, IL 60174-1984
phone: 630.377.4983 | fax: 630.377.7009 | www.stcharlesil.gov
esittler@stcharlesil.gov

CITY OF ST CHARLES, ILLINOIS

Sittler, Erika

From: Alan Riebe <ariebe@borderstates.com>
Sent: Thursday, September 24, 2020 12:52 PM
To: Sittler, Erika
Cc: Khoury, Jim; Talavera, Antonio R; Edwin Ensor; John Carey
Subject: VSA16/20 Budget Pricing - St Charles IL - Eaton/BSE

Erika,

This is a follow-up to our discussion this morning.

You asked for current budget pricing for all items on Eaton Qt BRDO737987 from Oct 2017 except with updated quantities noted below.

Item 10
Qty 1, VSA20A $18,900 net ea. budget

Item 30
Qty 5, VSA16 $17,200 net ea. budget

Item 60
Qty 1, Form 6 yard mount (will be used with the VSA20A) $5850 net ea. budget

Regards,

Alan Riebe
Utility Application Engineer
D 262.347.2112 | EXT 12112
C 262.442.3890
ariebe@borderstates.com | borderstates.com | connect with us

Border States Electric (BSE)
N29W23606 Woodgate Ct East | Pewaukee, WI 53072

Owners wanted—apply today

This email may contain material that is confidential or privileged; it is for the sole use of the intended recipient. If you are not the intended recipient, please contact the sender and delete all copies.

ST. CHARLES
SINCE 1834

BID WAIVER

☐ One Time ☐ Today through _____

Description: Eaton Sole Source Circuit Reclosers

Requested Vendor: Border States

Requested by: Paul Hopkins

Date: 09-28-20

Approvals: _____ Department Head

_____ Procurement

Bid Waivers are required when there are unique circumstances related to a proposed procurement that has not been competitively solicited.

1. This procurement is valued at $___$110,750_____ for this one time order, and/or

   $_____ for a 12 month period.

2. This good/service has been competitively solicited within the past 24 months. ☐ Yes ✕ No
   If yes: Was the solicitation published on the city website? ☐ Yes ☐ No

3. **Justification for Bid Waiver**

   Emergency i.e. declared by the Mayor and applicable to EOC/FEMA procedures.

   Urgent i.e. required to resolve an unanticipated problem that, if not resolved within 48 hours, may cause undue risk to individuals and/or extensive damage to property.

   Need for these goods/services were **not anticipated and procurement through normal channels would take too long**.

   A responsible **contractor was on site** performing a related repair, and, based on professional judgement; it was prudent to request this service/repair from said contractor.

   These goods are replacement parts for a **warrantied item, and the warranty is still in place**, and purchase of a non-brand item will jeopardize warranty.

   XX These goods/services are **inherently related to, and an ongoing part of**, other goods/services previously provided by the Provider.

   These goods utilize a **proprietary, patent, trademark, or customized programing** resulting in lack of competition.

   XX These goods are **standardized** for operational safety and efficiency.

   XX These goods are only available through the provider's **local distribution** channels.

   Other:

ATTACH THIS FORM TO FORMAL COUNCIL RECOMMENDATION; OR SCAN TO A/P IN LIEU OF QUOTES

ST. CHARLES SINCE 1834	**AGENDA ITEM EXECUTIVE SUMMARY**	Agenda Item number: 5.d
	Title:	Recommendation to Waive the Formal Bid Procedure and Approve a Professional Service Agreement for the Lead Line Replacement Program
	Presenter:	Tim Wilson

Meeting: Government Services Committee	Date: September 28, 2020	
Proposed Cost: $184,110	Budgeted Amount: $185,000	Not Budgeted: ☐

Executive Summary (*if not budgeted please explain*)**:**

The City of St Charles has about 4,080 lead service lines in the water distribution system. Future replacement cost for these service lines are in the range of $40 to $60 million. Even though the City of St. Charles has never had a system wide lead problem, there is continued pressure from federal and state regulators for a Lead Line Replacement Program. Currently the USEPA is in the process of finalizing a lead bill that will continue to lower acceptable lead levels in drinking water. As a result, the IEPA is currently providing a full principal forgiveness loan program. This funding opportunity is expected to last the next two fiscal years, with a maximum annual funding level of $4 million per municipality. Staff has already taken several steps to complete the prequalification process for the loan program.

Overall, the IEPA has approximately $150 million dedicated for this Lead Line Replacement Program. The loan funding will be distributed on a shovel ready priority. To prepare for the opportunity, the City will be required to complete several design and policy tasks. This preparation will need to be completed by the State funding calendar year of July 1. Some of the requirements include final loan application, financial review, design engineering, City policy, project coordination, construction easement, bidding and contracting. The proposed preparation work will neither guarantee funding or commit the City to funding; rather it is intended to position the City for the best opportunity. As with any other IEPA funding process, City Council final approval will be required in the future.

To aid the City with this process, staff is recommending approval of a Professional Services Agreement with Engineering Enterprises Inc. (EEI). EEI is currently aiding several other Fox Valley communities with the IEPA Lead Line Program including the City of Elgin and the Village of Carpentersville. EEI has successfully completed an IEPA Lead Line Service Replacement in the Village of Montgomery. The proposed contract is based on hourly not to exceed amount. As part of this approval, Staff is requesting to waive the formal bid procedure.

Attachments (*please list*)**:**

* Bid Waiver Form

Recommendation/Suggested Action (*briefly explain*)**:**

Recommendation to Waive the Formal Bid Procedure and approve a Professional Services Agreement for Lead Line Replacement Program to Engineering Enterprises, Inc. for $184,110 and a Resolution authorizing the Mayor and Clerk to execute the same on the behalf of the City of St Charles.

ST. CHARLES
SINCE 1834

BID WAIVER

X One Time ☐Today through _____

Description: Professional Service Agreement for Lead Line Replacement Program

Requested Vendor: Engineering Enterprises Inc.

Requested by: Tim Wilson Date: 09.14.2020

Approvals: _____ Department Head

9/23/2020 Procurement

Bid Waivers are required when there are unique circumstances related to a proposed procurement that has not been competitively solicited.

1. This procurement is valued at $_184,110_____for this one time order, and/or

   $_____ for a 12 month period.

2. This good/service has been competitively solicited within the past 24 months. ☐Yes X No
   If yes: Was the solicitation published on the city website? ☐Yes X No

3. **Justification for Bid Waiver**

☐**Emergency** i.e. declared by the Mayor and applicable to EOC/FEMA procedures.

☐**Urgent** i.e. required to resolve an unanticipated problem that, if not resolved within 48 hours, may cause undue risk to individuals and/or extensive damage to property.

X Need for these goods/services were **not anticipated and procurement through normal channels would take too long**.

☐A responsible **contractor was on site** performing a related repair, and, based on professional judgement; it was prudent to request this service/repair from said contractor.

☐These goods are replacement parts for a **warrantied item, and the warranty is still in place**, and purchase of a non-brand item will jeopardize warranty.

☐These goods/services are **inherently related to, and an ongoing part of**, other goods/services previously provided by the Provider.

☐These goods utilize a **proprietary, patent, trademark, or customized programing** resulting in lack of competition.

☐These goods are **standardized** for operational safety and efficiency.

☐These goods are only available through the provider's **local distribution** channels.

☐Other:

ATTACH THIS FORM TO FORMAL COUNCIL RECOMMENDATION; OR SCAN TO A/P IN LIEU OF QUOTES

ST. CHARLES SINCE 1834	**AGENDA ITEM EXECUTIVE SUMMARY**	Agenda Item number: 5.e
	Title:	Recommendation to Approve Professional Service Agreement for the Riverside Lift Station
	Presenter:	Tim Wilson

Meeting: Government Services Committee	Date: September 28, 2020	
Proposed Cost: $1,389,000	Budgeted Amount: $1,315,000	Not Budgeted: ☐

Executive Summary (*if not budgeted please explain*)**:**

The design portion of the Riverside lift station project is budgeted to start this fiscal year. Riverside Lift Station is located at the intersection of Riverside Avenue (Illinois Route 25) and Devereaux Way. The lift station is located at the site of what was the City of St. Charles' first wastewater treatment facility, which was a treatment tank. When the wastewater treatment facility was relocated up the hill to the east in the 1930's, this site remained as a collection point and major lift station for the City of St. Charles' wastewater system.

Replacement of the lift station includes a full building and wet weather capacity expansion. Along with the new building and supporting system. The public areas around the lift station will be modified and improved. The probable construction cost to replace the Riverside Lift Station is between $10 – $11 million. Based on the preliminary design study, three construction sites have been identified as feasible construction locations. The building will be relocated from its existing location adjacent the river, to an area across Riverside Ave. near or in place of the Jones Law Office. Through the design process, staff will continue to work with impacted parties to provide the most reasonable location. Construction bid advertisements are anticipated to go out in the fall/winter of 2021 with the construction of the facility expected to be completed Spring 2023.

The funding source of this project is the Water Pollution Control Loan Program and requires a process for Engineering Procurement based on the qualification's selection. This process included the City issuing a Request for Qualifications (RFQ). On October 21, 2019, the City received three (3) RFQ submissions. City staff evaluated the RFQ submittals and ranked the firms based on the standard criteria. Because the complexity of this project staff waited until a construction feasibility study was completed prior to negotiating the final contract and scope of work. The City started the negotiation phase on July, 2020. Any expenditures over the budgeted amount will be covered through the Water Pollution Control Loan Program.

The proposed engineering contract for the project includes: design services, IEPA loan application, bid process, contractor negotiations and construction phase oversite and budgeting for this project extends over the next three years. Staff recommend to approve and award the engineering contract in its entirety to Trotter and Associates, with final funding approved annually as part of the budget approval process.

Attachments (*please list*)**:**

* Riverside Lift tation Replacement Professional Services Agreement

Recommendation/Suggested Action (*briefly explain*)**:**
Recommendation to approve Professional Services Agreement for the Riverside Lift Station Replacement to Trotter and Associates for $1,389,000 and a Resolution authorizing the Mayor and Clerk to execute the same on the behalf of the City of St Charles.

August 26, 2020

Honorable Raymond Rogina
Mayor of St. Charles
City of St. Charles
2 E. Main Street
St. Charles, Illinois 60174

Re: Riverside Lift Station Replacement
Professional Services Agreement

Dear Mayor Rogina:

We sincerely appreciate this opportunity to offer our services. Enclosed for your review is the engineering services agreement for the referenced project. Please contact us if there are any questions or changes to the listed scope of services. If you would like to proceed with the contract, please sign and return one copy of the agreement.

Sincerely,

TROTTER & ASSOCIATES, INC.

Robert Scott Trotter, P.E., BCEE
President

This Page is intentionally left blank

August 26, 2020

Honorable Raymond Rogina
Mayor of St. Charles
City of St. Charles
2 E. Main Street
St. Charles, Illinois 60174

Re: Riverside Lift Station Replacement
Professional Services Letter Agreement and Exhibits

Dear Mayor Rogina,

Trotter and Associates, Inc. (ENGINEER) is pleased to provide professional services to the City of St. Charles, IL (CLIENT) for the Riverside Lift Station Replacement Project (hereinafter referred to as the "PROJECT").

Project Background

Near the end of 2019, the City contracted with Trotter and Associates to develop the conceptual design of the Riverside Lift Station Replacement. Included with this agreement was coordination of a half-day work session and several follow-up discussions with City staff to develop the best potential alternatives for this project. The City also provided an addendum to the agreement to facilitate survey of the existing conditions of the site.

The City of St. Charles Wastewater Division is comprised of two wastewater treatment plants, designated as the Main Wastewater Treatment Facility (9.0 MGD) and Westside Water Reclamation Facility (0.7 MGD). The Main WWTF receives flow from two tributary lift stations, East Side and Riverside Lift Station. Riverside Lift Station is located at the site of what was the City of St. Charles' first wastewater treatment facility, and part of the original structure is still utilized as part of this station. This lift station was constructed as part of the wastewater treatment plant improvements in the early 1930's and served the entire community until East Side Lift Station was constructed as part of Stage II in 1973. The existing masonry structure at Riverside was constructed in 1981, and included screening, a five-pump system, an emergency back-up generator, and construction of a new 24" force main.

TAI completed a Facility Plan for the Main Service Area in 2015, and in that plan identified the Riverside Lift Station as needing major rehabilitation or replacement. The Riverside Lift Station serves most of the downtown area and west to Randall Road. Based on previous sanitary sewer analyses, the estimated peak wet weather flow was 28.6 MGD which exceeds the rated firm capacity of this lift station of 19.7 MGD. The drawdown test conducted as a part of the Facility Plan identified that the capacity of the submersible pumps was compromised, and that the actual firm capacity of the lift station at that time was 13.4 MGD.

Pump	Rated Capacity	Test Flow Rate and Pressure	Tolerance (flow and pressure)
No. 1 (75 HP)	3,480 gpm @ 59.0' TDH	1,980 gpm @ 52.2' TDH	-43% and -12%
No. 2 (75 HP)	3,480 gpm @ 59.0' TDH	2,280 gpm @ 53.3' TDH	-34% and -10%
No. 3 (180 HP)	6,700 gpm @ 73.5' TDH	5,150 gpm @ 46.4' TDH	-23% and -37%
No. 4 (180 HP)	6,700 gpm @ 73.5' TDH	6,710 gpm @ 46.4' TDH	0% and -37%
Firm Capacity	13,660 gpm (19.7 MGD)	9,325 gpm (13.4 MGD)	

During development of the 2015 Facility Plan, numerous constraints were considered, including proximity of the bike path, IL Route 25, Devereaux Way, existing utilities, floodplain/floodway, and bedrock. Additional considerations include higher Peak Wet Weather Flows, odor concerns, maintenance concerns, and constructability. During the Facility Plan, alternative locations for the new lift station were considered but at that time the team was directed to utilize the existing location. TAI therefore worked with City Staff to develop a conceptual plan that addressed the constraints and concerns on the existing site.

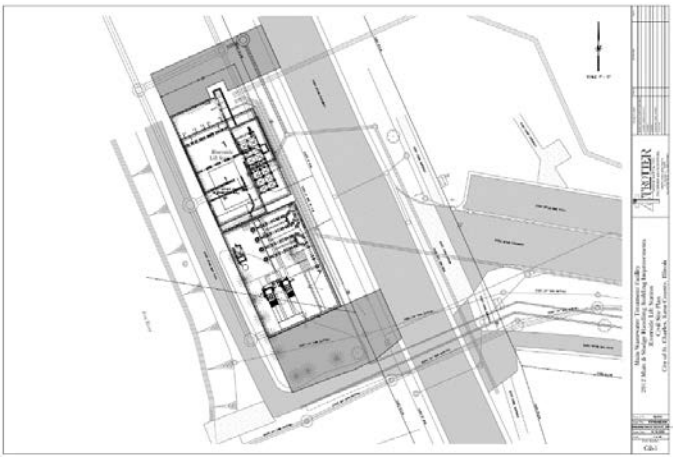

Lift Station Conceptual Design

In order to properly size the new lift station, TAI first performed a study to confirm the 10-year wet weather flows to the existing lift station. After reviewing the information from previous sanitary evaluation studies (namely the report from 1996), the 10-year flows to the Riverside Lift Station was approximately 30 MGD. This was deduced by tracing the manhole data upstream of the lift station for a 10-year event.

Tributary Area	CFS	MGD
North (1996 - page 91)	24.452	15.803
Park Shore (1996 - pg 95)	14.312	9.249
Second Place 2 (1996 page 94)	0.847	0.547
Second Place 1 (1996 page 93)	3.027	1.956
		27.556

Comparing the most recent capacity study for basin SC-02, it is estimated that the Prairie Centre development and future development in this basin will lead to a net increase of the 10-year flows from this sub-basin by 0.534 MGD. The sanitary sewer along IL Route 31 that is in currently in design to increase to a 21" line will increase conveyance of 1.76 MGD beyond the 15". According to water service data and historical aerial photography, development has added approximately 1,585 PE since the SSES was performed in 1996, which would increase peak hourly flow to the Riverside Lift Station by 0.58 MGD. This brings the total 10-year flow to the lift station to 29.89 MGD. Considering a 10% increase for future development and redevelopment within the tributary area, it is recommended that the new Riverside Lift Station be sized for a minimum firm capacity of 33 MGD.

Prior to proceeding with the concept presented in the Facility Plan, the City and TAI revisited alternative locations which may be more consistent with the City's long-term needs. TAI evaluated six alternative locations and presented those alternatives during a half-day work session with the City. As a result of those discussions, TAI was directed to further develop preliminary layouts, analyze impacts and update cost estimates for the top three alternatives. Once complete, the top three alternatives were presented to City staff and it was decided that Alternative #3 was the best solution.

GENERAL CONDITIONS	$912,500
SITEWORK	$1,677,880
LIFT STATION REPLACEMENT	$3,622,490
ELECTRICAL & CONTROLS	$691,500
CONSTRUCTION SUB-TOTAL	**$6,904,370**
CONTIGENCY @ 25%	**$1,726,093**
ESTIMATED CONSTRUCTION COST	**$8,630,463**
DESIGN ENGINEERING	**$746,002**
CONSTRUCTION ENGINEERING	**$685,208**
PROJECT TOTAL	**$10,061,673**

Project Schedule

TAI's schedule for the conceptual design of the Riverside Lift Station is indicated below. This is based on an effective date of September 1st, 2020:

TASK	DATE
Preliminary Design	September - November, 2020
Permitting	October 2020 - June 2021
Design Development	November 2020 - March 2021
Final Design	March 2021 - August 2021
Bidding[1]	September 2021 - November 2021
Construction[1]	March 2022 - April 2023

NOTE: 1. Date of this task will be dependent on approval by City Council.

Scope of Services

Our services will consist of customary civil engineering and surveying services and related engineering services incidental thereto, described as follows;

General Tasks

1. Schedule and facilitate a project Kick off Meeting with City staff.
2. Evaluate and determine the project schedule to meet City timeframe.
3. Schedule and facilitate a minimum of five monthly meetings over the proposed design schedule.
4. Schedule site visits to City facilities.
5. Review existing City documentation that may be appropriate to project.
6. Provide monthly status reports on; project progress, tasks accomplished in previous month, action items for upcoming month and project budget.
7. Provide lead permit coordination, submittal, meetings, and design changes to all agencies.
8. Provide recommendations to offsite improvement and operational impacts.
9. Submit draft versions of design at 60%, 95% and final completion.

1. Preliminary Engineering Report

   a. Prepare conceptual design summary memo for three alternative concept designs to City staff and receive direction to proceed with conceptual design.
   b. Further develop the conceptual design including geometrics, profiles, simplified plan view of the proposed lift station, preliminary hydraulics, soil boring analysis, and preliminary equipment selection.
   c. Prepare concept cost estimates.
   d. Present the concept and cost estimates in two meetings, one with City Administration and one with Council for final approval.
   e. Prepare a preliminary engineering report consistent with the Illinois EPA Facilities Planning Submittal Checklist for use in evaluation for Low Interest Loan Funding.
      i. Conduct a minimum of 5 meetings with Staff (and vendors) to review design and equipment selection.
      ii. Conduct site visits as needed for conceptual layouts of facilities with the selected technology.
      iii. Develop conceptual site plan with layout of proposed structures, traffic routing, conceptual piping, and sequence of construction to keep existing system in operation during construction.
      iv. Based on the conceptual design, prepare conceptual cost estimate for the proposed improvements.
   f. City to provide legal review, development/zoning review, Building and Fire Department review, and coordination will all other internal review agencies. City to facilitate meetings with Kane County Forest Preserve and IDOT Local Roads. City to provide soil borings as necessary. TAI's attendance and preparation/follow-up for meetings with internal and external agencies shall be paid for through the allowance as they cannot be identified at this time.

2. Preparation of IEPA Low Interest Loan Application

   a. Prepare and Submit Low Interest Loan Pre-Application.
   b. Develop and submit planning documents as required by the IEPA.
   c. Complete necessary documents for the IEPA for City's approval and signatures.
   d. Act as liaison between the IEPA Project Manager and the City to address the IEPA Low Interest Loan package, review comments and correspondence.
   e. Work with the City to develop the required ordinances/resolutions required for the Low Interest Loan.
   f. Incorporate IEPA required contract documents into the project specifications.

3. Preliminary Design Phase

   a. Meet with City on a bi-weekly basis to determine design layout details for the project.
   b. Make measured drawings of and investigate existing conditions or facilities, or to verify the accuracy of as-built drawings or other information furnished by the City.
   c. Make necessary field surveys and topographic for relocation of historical monuments.
   d. Obtain preliminary approval of design from Building and Fire Departments.
   e. Schedule 25% Progress Review Meeting.

4. Design and Development Phase

   a. Based on the approved Preliminary Design Phase, prepare Preliminary Engineering Plans and Specifications to show the scope, extent and character of the work to be furnished and performed by the Contractor for the proposed modifications to the existing system and layout. Include the following but is not limited to these drawings.
      i. General Construction Details and Notes
      ii. 60% Site Civil Drawings showing roadway, pathway improvements, underground utilities, process piping, site grading and landscaping if applicable.
      iii. 60% Demolition drawings showing existing structures and utilities to be removed if applicable.
      iv. 60% Architectural drawings including layout and elevation views.
      v. 60% Structural drawings including layout and section views.
      vi. 60% Mechanical drawings including layout views and equipment schedules.
      vii. 60% Process drawings including the equipment layout, valves, meters and process piping.
      viii. 60% Electrical Drawings depicting power distribution requirements within the proposed improvements.
      ix. 60% Instrumentation drawing depicting the scope and extent of the proposed control system.
      x. 60% Project specifications with all process equipment selected in accordance with the 32 / 64 Division CSI Format.
   b. Coordinate with Sub-consultants and other engineers including the City's SCADA coordinator of Concentric Integration as required to deliver the drawings and specifications indicated in Item 4.a.
   c. Advise City if additional reports, data, information, or testing services are necessary and assist City in obtaining such reports, data, information, or services.

d. Based on the information contained in the Preliminary Design Phase documents, submit a revised opinion of probable Construction Cost and any adjustments to Total Project Costs known to Engineer.
e. Furnish the Design Development Phase documents to and review with the City.
f. Coordinate with City Fire and Building Departments to obtain feedback on their requirements.
g. Submit to the City revised opinion of probable Construction Cost within 60 days after authorization to proceed with this phase.

5. Final Design Phase

a. Based on the approved Design Development, prepare Final (95%) Engineering Plans and Specifications to show the scope, extent and character of the work to be furnished and performed by the Contractor. Include the following but is not limited to these drawings.
    i. General Construction Details and Notes.
    ii. Site Civil Drawings showing roadway, storm water management, process piping, underground utilities & site restoration.
    iii. Demolition drawings if needed including plans, sections, details and schedules detailing existing structures and utilities to be removed.
    iv. Architectural drawings including floor plans, roof plans, elevation views, sections, details and schedules for any proposed structures.
    v. Structural drawings including plans, sections, details and schedules for construction of the foundations and slabs.
    vi. Process drawings including the plans, sections, details and schedules for equipment and process piping.
    vii. Electrical Drawings depicting lighting, controls and power distribution plans, elevations, and schedules.
    viii. Instrumentation drawings depicting the scope and extent of the proposed control system.
    ix. Project specifications in accordance with the 32/64 Division CSI Format or recommended alternative.
    x. Develop other documents necessary to bid the project.
b. Submit final engineering plans and specifications to Illinois EPA for construct and operate permit.
c. Prepare an updated opinion of probable cost, based on the Final Engineering Plans.
d. Provide 95% complete plans to the City, City's SCADA coordinator and effected agencies for review and approval.
e. Make revisions to the plans to incorporate changes required by reviewing agencies.
f. Acquire permits through all pertinent jurisdictional agencies.
g. Complete 100% drawings to satisfaction of appropriate permitting bodies.

6. Bidding and Negotiating Phase

a. Assist City in advertising for and obtaining bids or negotiating proposals for the Work.
b. Issue Addenda as appropriate to clarify, correct, or change the Bidding Documents.
c. Attend the Bid opening, prepare Bid tabulation sheets, and assist the City of St. Charles in evaluating Bids or proposals and in assembling and awarding contracts work.
d. Participate in any negotiations or clarification discussion.
e. Furnish and supply drawings and project specification copies as required.

7. Construction Phase

a. Consult with the City and act as the City's representative during execution of construction.
b. Provide full-time field engineering services (resident project representative) during the duration of construction activities.
c. Assist the City in the selection of an independent testing laboratory to perform all necessary testing and inspections required during construction.
d. Prepare and participate in a Pre-Construction Conference prior to commencement of Work at the Site.
e. As appropriate, establish baselines and benchmarks for locating the work, which in the Engineer's judgments are necessary to enable Contractor to proceed.
f. During Construction collect all GIS data for city as defined in attached GIS requirements (reference Exhibit G). On final close-out and as-built submittal all collected data will be coordinated and transferred to City GIS group.
g. Make additional visits to the Site at intervals appropriate to the various stages of construction, as Engineer deems necessary, in order to observe as and experienced and qualified design professional the progress and quality of the Work.
h. Recommend to the City, if necessary, that Contractor's work be disapproved and rejected while it is in progress.
i. Issue necessary clarifications and interpretations of the Contract Documents as appropriate to the orderly completion of Contractor's work.
j. Recommend Change Orders and Work Change Directives to the City, as appropriate, and prepare Change Orders and Work Change Directives as required.
k. Review and approve or take other appropriate action in respect to Shop Drawings and Samples and other data which Contractor is required to submit, but only for conformance with the information given in the Contract Documents and compatibility with the design concept of the completed Project as a functioning whole as indicated in the Contract Documents.
l. Evaluate and determine the acceptability of substitute or "or-equal" materials and equipment proposed by Contractor.
m. Require such special inspections or tests of Contractor's work as deemed reasonably necessary, and receive and review all certificates of inspections, tests, and approvals required by Laws and Regulations or the Contract Documents.
n. Provide weekly reports to City staff on status of construction, hours spent on site.

Contractor's Completion Documents.

a. Receive and review maintenance and operating instructions, schedules, warranties, and guarantees.
b. Receive bonds, certificates, or other evidence of insurance not previously submitted and required by the Contract Document's, certificates of inspection, tests and approvals, Shop Drawings, Samples and other data. Engineer shall transmit these documents to the City.
c. After notice from Contractor that Contractor considers the entire Work ready for its intended use, in company with City and Contractor, conduct an inspection to determine if the Work is Substantially Complete.
d. Prepare and furnish to the City Record Drawings showing appropriate record information based on Project annotated record documents received from Contractor.
e. Preparation of operation and maintenance manuals and transmit these documents to the City.Preliminary Engineering Report

In order to address minor changes in project scope, the overall fee schedule for design engineering services includes a separate dedicated amount that may be authorized by City staff for minor changes. Changes to the scope of services outlined in this agreement shall be authorized through execution of an Exhibit D - Contract Addendum.

Compensation

A fixed fee amount of $1,389,000.00 based on the following assumed distribution of compensation:

General Tasks	$118,000
Preliminary Report	$67,000
IEPA Loan	$14,000
Preliminary Design Phase	$48,000
Design Development Phase	$211,000
Final Design Phase	$221,000
Design Addendum	$20,000
Reimbursable Expenses	$5,000
Design Engineering Subtotal	**$704,000**
Bidding and Negotiating Phase	$37,000
Construction Phase	$610,000
Contractor's Completion Documents	$33,000
Reimbursable Expenses	$5,000
Construction Engineering Subtotal	**$685,000**
Not to Exceed Grand Total:	**$1,389,000**

ENGINEER may alter the distribution of compensation between individual phases of the work noted herein to be consistent with services actually rendered, but shall not exceed the total estimated compensation amount unless approved in writing by CLIENT. The total estimated compensation for ENGINEER's services included in the breakdown by phases incorporates all labor, overhead, profit, and ENGINEER's Consultant's charges.

The amounts billed for ENGINEER's services will be based on the cumulative hours charged to the PROJECT during the billing period by each class of ENGINEER's employees times Standard Hourly Rates for each applicable billing class, plus Reimbursable Expenses and ENGINEER's Consultant's charges. The Standard Hourly Rates and Reimbursable Expenses Schedule will be adjusted annually as of January 1st to reflect equitable changes in the compensation payable to ENGINEER.

Design Addendum. ENGINEER has incorporated a portion of this proposal that will only be billable if approved in writing at the discretion of the CLIENT.

Subconsultants. ENGINEER has incorporated subconsulting services for Architectural, Structural, Mechanical, and Fire Protection engineering services into the proposal.

Reimbursable Expenses. Engineer has incorporated $10,000 for Reimbursable Expenses, including printing, plotting and shipping required for the completion of the work. Actual expenses will be compensated for based on actual cost as a pass-through without mark-up.

Miscellaneous

This Agreement constitutes the entire agreement between the parties and supersedes any prior oral or written representations. This agreement may not be changed, modified, or amended except in writing signed by both parties. In the event of any conflict among the exhibits, the exhibit of the latest date shall control.

ENGINEER may have portions of the Services performed by its affiliated entities or their employees, in which event ENGINEER shall be responsible for such services and CLIENT shall look solely to ENGINEER as if ENGINEER performed the Services. In no case shall CLIENT'S approval of any subcontract relieve ENGINEER of any of its obligations under this Agreement. However, ENGINEER is not responsible whatsoever for any obligations its subcontractors might have to its employees, including but not limited to proper compensation of its employees.

In the event CLIENT uses a purchase order form or other CLIENT developed document to administer this Agreement, the use of such documents shall be for the CLIENT's convenience only, and any provisions, terms or conditions within the CLIENT developed document shall be deemed stricken, null and void. Any provisions, terms or conditions which the CLIENT would like to reserve shall be added to Exhibit C – Supplemental Conditions and agreed to by both parties.

ENGINEER acknowledges that this project and the scope of work performed thereto will require ENGINEER and all lower tiered subcontractors of ENGINEER to comply with all obligations under and pursuant to the any applicable local, state and/or federal prevailing wage laws (e.g. Davis-Bacon Act, Illinois Prevailing Wage Act, etc.), including but not limited to all wage, notice and/or record keeping requirements to the extent applicable, necessitated and required by law.

If during negotiations or discussion with a Client it becomes clear that Client has determined prevailing wages are not applicable to the work performed by Trotter & Associates, it is best to confirm that understanding in writing with appropriate indemnification language.

Contents of Agreement

This Letter Agreement and the Exhibits attached hereto and incorporated herein, represent the entire understanding with respect to the Project and may only be modified in writing signed by both parties.

IN WITNESS WHEREOF, the parties hereto have executed this Agreement.

CLIENT:	Trotter and Associates, Inc.:
_____	_____
By:_____	By:_____
Title:_____	Title:_____
Effective Date:_____	Date Signed: _____
Address for giving notices:	Address for giving notices:
Designated Representative	Designated Representative
Title:	Title:
Phone Number:	Phone Number:
Facsimile Number:	Facsimile Number:
E-Mail Address:	E-Mail Address:

ATTACHMENTS:

EXHIBT A – STANDARD TERMS AND CONDITIONS
EXHIBIT B – SCHEDULE OF HOURLY RATES AND REIMBURSIBLE EXPENSES
EXHIBIT C – SUPPLEMENTAL GENERAL CONDITIONS
EXHIBIT D – CONTRACT ADDENDUM
EXHIBIT E – UPDATED FACILITY PLAN COST ESTIMATE
EXHIBIT F – MANHOUR ESTIMATE

EXHIBIT A - STANDARD TERMS AND CONDITIONS

Table of Contents

ARTICLE 1 - SERVICES OF ENGINEER		1
1.01	Scope	1
ARTICLE 2 - CLIENT'S RESPONSIBILITIES		1
2.01	General	1
ARTICLE 3 - TIMES FOR RENDERING SERVICES		2
3.01	General	2
3.02	Suspension	2
ARTICLE 4 - PAYMENTS TO ENGINEER		3
4.01	Methods of Payment for Services and Reimbursable Expenses of ENGINEER	3
4.02	Other Provisions Concerning Payments	3
ARTICLE 5 - OPINIONS OF COST		3
5.01	Opinions of Probable Construction Cost	3
5.02	Designing to Construction Cost Limit	3
5.03	Opinions of Total Project Costs	3
ARTICLE 6 - GENERAL CONSIDERATIONS		3
6.01	Standards of Performance	3
6.02	Authorized Project Representatives	4
6.03	Design without Construction Phase Services	4
6.04	Use of Documents	4
6.05	Insurance	5
6.06	Termination	6
6.07	Controlling Law	6
6.08	Successors, Assigns, and Beneficiaries	6
6.09	Dispute Resolution	6
6.10	Hazardous Environmental Condition	6
6.11	Allocation of Risks	7
6.12	Notices	7
6.13	Survival	7
6.14	Severability	7
6.15	Waiver	7
6.16	Headings	7
6.16	Definitions	7

ARTICLE 1 - SERVICES OF ENGINEER

1.01 Scope

A. ENGINEER shall provide the Professional Services set forth herein and in the Letter Agreement.

B. Upon this Agreement becoming effective, ENGINEER is authorized to begin Services.

ARTICLE 2 - CLIENT'S RESPONSIBILITIES

2.01 General

A. Provide ENGINEER with all criteria and full information as to CLIENT's requirements for the Project, including design objectives and constraints, space, capacity and performance requirements, flexibility, and expandability, and any budgetary limitations; and furnish copies of all design and construction standards which CLIENT will require to be included in the Drawings and Specifications; and furnish copies of CLIENT's standard forms, conditions, and related documents for ENGINEER to include in the Bidding Documents, when applicable.

B. Furnish to ENGINEER any other available information pertinent to the Project including reports and data relative to previous designs, or investigation at or adjacent to the Site.

C. Following ENGINEER's assessment of initially-available Project information and data and upon ENGINEER's request, furnish or otherwise make available such additional Project related information and data as is reasonably required to enable ENGINEER to complete its Basic and Additional Services. Such additional information or data would generally include the following:

1. Property descriptions.

2. Zoning, deed, and other land use restrictions.

3. Property, boundary, easement, right-of-way, and other special surveys or data, including establishing relevant reference points.

4. Explorations and tests of subsurface conditions at or contiguous to the Site, drawings of physical conditions in or relating to existing surface or subsurface structures at or contiguous to the Site, or hydrographic surveys, with appropriate professional interpretation thereof.

5. Environmental assessments, audits, investigations and impact statements, and other relevant environmental or cultural studies as to the Project, the Site, and adjacent areas.

6. Data or consultations as required for the Project but not otherwise identified in the Agreement or the Exhibits thereto.

D. Give prompt written notice to ENGINEER whenever CLIENT observes or otherwise becomes aware of a Hazardous Environmental Condition or of any other development that affects the scope or time of performance of ENGINEER's services, or any defect or nonconformance in ENGINEER's services or in the work of any Contractor.

E. Authorize ENGINEER to provide Additional Services as set forth in Exhibit D - Addendum of the Agreement as required.

F. Arrange for safe access to and make all provisions for ENGINEER to enter upon public and private property as required for ENGINEER to perform services under the Agreement.

G. Examine all alternate solutions, studies, reports, sketches, Drawings, Specifications, proposals, and other documents presented by ENGINEER (including obtaining advice of an attorney, insurance counselor, and other advisors or consultants as CLIENT deems appropriate with respect to such examination) and render in writing timely decisions pertaining thereto.

H. Provide reviews, approvals, and permits from all governmental authorities having jurisdiction to approve all phases of the Project designed or specified by ENGINEER and such reviews, approvals, and consents from others as may be necessary for completion of each phase of the Project.

I. Provide, as required for the Project:

1. Accounting, bond and financial advisory, independent cost estimating, and insurance counseling services.

2. Legal services with regard to issues pertaining to the Project as CLIENT requires, Contractor raises, or ENGINEER reasonably requests.

3. Such auditing services as CLIENT requires to ascertain how or for what purpose Contractor has used the moneys paid.

4. Placement and payment for advertisement for Bids in appropriate publications.

J. Advise ENGINEER of the identity and scope of services of any independent consultants employed by CLIENT to perform or furnish services in regard to the Project, including, but not limited to, cost estimating, project peer review, value engineering, and constructability review.

K. Furnish to ENGINEER data as to CLIENT's anticipated costs for services to be provided by others for CLIENT so that ENGINEER may make the necessary calculations to develop and periodically adjust ENGINEER's opinion of Total Project Costs.

L. If CLIENT designates a manager or an individual or entity other than, or in addition to, ENGINEER to represent CLIENT at the Site, the duties, responsibilities, and limitations of authority of such other party shall be disclosed to the ENGINEER and coordinated in relation to the duties, responsibilities, and authority of ENGINEER.

M. If more than one prime contract is to be awarded for the Work designed or specified by ENGINEER, designate a person or entity to have authority and responsibility for coordinating the activities among the various prime Contractors, and define and set forth the duties, responsibilities, and limitations of authority of such individual or entity and the relation thereof to the duties, responsibilities, and authority of ENGINEER is to be mutually agreed upon and made a part of this Agreement before such services begin.

N. Attend the pre-bid conference, bid opening, pre-construction conferences, construction progress and other job related meetings, and Substantial Completion and final payment inspections.

O. Provide the services of an independent testing laboratory to perform all inspections, tests, and approvals of Samples, materials, and equipment required by the Contract Documents, or to evaluate the performance of materials, equipment, and facilities of CLIENT, prior to their incorporation into the Work with appropriate professional interpretation thereof.

P. Provide inspection or monitoring services by an individual or entity other than ENGINEER (and disclose the identity of such individual or entity to ENGINEER) as CLIENT determines necessary to verify:

1. That Contractor is complying with any Laws and Regulations applicable to Contractor's performing and furnishing the Work.

2. That Contractor is taking all necessary precautions for safety of persons or property and complying with any special provisions of the Contract Documents applicable to safety.

Q. Provide ENGINEER with the findings and reports generated by the entities providing services pursuant to paragraphs 2.01.O and P.

ARTICLE 3 - TIMES FOR RENDERING SERVICES

3.01 General

A. ENGINEER's services and compensation under this Agreement have been agreed to in anticipation of the orderly and continuous progress of the Project through completion. Unless specific periods of time or specific dates for providing services are specified in this Agreement, ENGINEER's obligation to render services hereunder will be for a period which may reasonably be required for the completion of said services.

B. If in this Agreement specific periods of time for rendering services are set forth or specific dates by which services are to be completed are provided, and if such periods of time or dates are changed through no fault of ENGINEER, the rates and amounts of compensation provided for herein shall be subject to equitable adjustment. If CLIENT has requested changes in the scope, extent, or character of the Project, the time of performance of ENGINEER's services shall be adjusted equitably.

C. For purposes of this Agreement the term "day" means a calendar day of 24 hours.

3.02 Suspension

A. If CLIENT fails to give prompt written authorization to proceed with any phase of services after completion of the immediately preceding phase, or if ENGINEER's services are delayed through no fault of ENGINEER, ENGINEER may, after giving seven days written notice to CLIENT, suspend services under this Agreement.

B. If ENGINEER's services are delayed or suspended in whole or in part by CLIENT, or if ENGINEER's services are extended by Contractor's actions or inactions for more than 90 days through no fault of ENGINEER, ENGINEER shall be entitled to equitable adjustment of rates and amounts of compensation provided for elsewhere in this Agreement to reflect, reasonable costs incurred by ENGINEER in connection with, among other

things, such delay or suspension and reactivation and the fact that the time for performance under this Agreement has been revised.

ARTICLE 4 - PAYMENTS TO ENGINEER

4.01 Methods of Payment for Services and Reimbursable Expenses of ENGINEER

A. *For Basic Services*. CLIENT shall pay ENGINEER for Basic Services performed or furnished under as outlined in the Letter Agreement

B. *For Additional Services*. CLIENT shall pay ENGINEER for Additional Services performed or furnished as outlined in Exhibit D.

C. *For Reimbursable Expenses*. CLIENT shall pay ENGINEER for Reimbursable Expenses incurred by ENGINEER and ENGINEER's Consultants as set forth in Exhibit B.

4.02 Other Provisions Concerning Payments

A. *Preparation of Invoices*. Invoices will be prepared in accordance with ENGINEER's standard invoicing practices and will be submitted to CLIENT by ENGINEER, unless otherwise agreed.

B. *Payment of Invoices*. Invoices are due and payable within 30 days of receipt. If CLIENT fails to make any payment due ENGINEER for services and expenses within 30 days after receipt of ENGINEER's invoice therefor, the amounts due ENGINEER will be increased at the rate of 1.0% per month (or the maximum rate of interest permitted by law, if less) from said thirtieth day. In addition, ENGINEER may, after giving seven days written notice to CLIENT, suspend services under this Agreement until ENGINEER has been paid in full all amounts due for services, expenses, and other related charges. Payments will be credited first to interest and then to principal.

C. *Disputed Invoices*. In the event of a disputed or contested invoice, only that portion so contested may be withheld from payment, and the undisputed portion will be paid.

D. *Payments Upon Termination.*

1. In the event of any termination under paragraph 6.06, ENGINEER will be entitled to invoice CLIENT and will be paid in accordance with Exhibit B for all services performed or furnished and all Reimbursable Expenses incurred through the effective date of termination.

2. In the event of termination by CLIENT for convenience or by ENGINEER for cause, ENGINEER, in addition to invoicing for those items identified in subparagraph 4.02.D.1, shall be entitled to invoice CLIENT and shall be paid a reasonable amount for services and expenses directly attributable to termination, both before and after the effective date of termination, such as reassignment of personnel, costs of terminating contracts with ENGINEER's Consultants, and other related close-out costs, using methods and rates for Additional Services as set forth in Exhibit B.

E. *Records of ENGINEER's Costs*. Records of ENGINEER's costs pertinent to ENGINEER's compensation under this Agreement shall be kept in accordance with generally accepted accounting practices. To the extent necessary to verify ENGINEER's charges and upon CLIENT's timely request, copies of such records will be made available to CLIENT at cost.

F. *Legislative Actions*. In the event of legislative actions after the Effective Date of the Agreement by any level of government that impose taxes, fees, or costs on ENGINEER's services or other costs in connection with this Project or compensation therefore, such new taxes, fees, or costs shall be invoiced to and paid by CLIENT as a Reimbursable Expense to which a Factor of 1.0 shall be applied. Should such taxes, fees, or costs be imposed, they shall be in addition to ENGINEER's estimated total compensation.

ARTICLE 5 - OPINIONS OF COST

5.01 Opinions of Probable Construction Cost

A. ENGINEER's opinions of probable Construction Cost provided for herein are to be made on the basis of ENGINEER's experience and qualifications and represent ENGINEER's best judgment as an experienced and qualified professional generally familiar with the industry. However, since ENGINEER has no control over the cost of labor, materials, equipment, or services furnished by others, or over the Contractor's methods of determining prices, or over competitive bidding or market conditions, ENGINEER cannot and does not guarantee that proposals, bids, or actual Construction Cost will not vary from opinions of probable Construction Cost prepared by ENGINEER. If CLIENT wishes greater assurance as to probable Construction Cost, CLIENT shall employ an independent cost estimator.

5.02 Designing to Construction Cost Limit

A. If a Construction Cost limit is established between CLIENT and ENGINEER, such Construction Cost limit and a statement of ENGINEER's rights and responsibilities with respect thereto will be specifically set forth in Exhibit C - Supplemental General Conditions.

5.03 Opinions of Total Project Costs

A. ENGINEER assumes no responsibility for the accuracy of opinions of Total Project Costs.

ARTICLE 6 - GENERAL CONSIDERATIONS

6.01 Standards of Performance

A. The standard of care for all professional engineering and related services performed or furnished by ENGINEER under this Agreement will be the care and skill ordinarily used by members of ENGINEER's profession practicing under similar circumstances at the same time and in the same locality. ENGINEER makes no warranties, express or implied, under this Agreement or otherwise, in connection with ENGINEER's services.

B. ENGINEER shall be responsible for the technical accuracy of its services and documents resulting therefrom, and CLIENT shall not be responsible for discovering deficiencies therein. ENGINEER shall correct such deficiencies without additional compensation except to the extent such action is directly attributable to deficiencies in CLIENT-furnished information.

C. ENGINEER shall perform or furnish professional engineering and related services in all phases of the Project to which this Agreement applies. ENGINEER shall serve as CLIENT's prime professional for the Project. ENGINEER may employ such ENGINEER's Consultants as ENGINEER deems necessary to assist in the performance or furnishing of the services. ENGINEER shall not be required to employ any ENGINEER's Consultant unacceptable to ENGINEER.

D. ENGINEER and CLIENT shall comply with applicable Laws or Regulations and CLIENT-mandated standards. This Agreement is based on these requirements as of its Effective Date. Changes to these requirements after the Effective Date of this Agreement may be the basis for modifications to CLIENT's responsibilities or to ENGINEER's scope of services, times of performance, or compensation.

E. CLIENT shall be responsible for, and ENGINEER may rely upon, the accuracy and completeness of all requirements, programs, instructions, reports, data, and other information furnished by CLIENT to ENGINEER pursuant to this Agreement. ENGINEER may use such requirements, reports, data, and information in performing or furnishing services under this Agreement.

F. CLIENT shall make decisions and carry out its other responsibilities in a timely manner and shall bear all costs incident thereto so as not to delay the services of ENGINEER.

G. Prior to the commencement of the Construction Phase, CLIENT shall notify ENGINEER of any other notice or certification that ENGINEER will be requested to provide to CLIENT or third parties in connection with the Project. CLIENT and ENGINEER shall reach agreement on the terms of any such requested notice or certification, and CLIENT shall authorize such Additional Services as are necessary to enable ENGINEER to provide the notices or certifications requested.

H. ENGINEER shall not be required to sign any documents, no matter by whom requested, that would result in the ENGINEER's having to certify, guarantee or warrant the existence of conditions whose existence the ENGINEER cannot ascertain. CLIENT agrees not to make resolution of any dispute with the ENGINEER or payment of any amount due to the ENGINEER in any way contingent upon the ENGINEER's signing any such certification.

I. During the Construction Phase, ENGINEER shall not supervise, direct, or have control over Contractor's work, nor shall ENGINEER have authority over or responsibility for the means, methods, techniques, sequences, or procedures of construction selected by Contractor, for safety precautions and programs incident to the Contractor's work in progress, nor for any failure of Contractor to comply with Laws and Regulations applicable to Contractor's furnishing and performing the Work.

J. ENGINEER neither guarantees the performance of any Contractor nor assumes responsibility for any Contractor's failure to furnish and perform the Work in accordance with the Contract Documents.

K. ENGINEER shall not be responsible for the acts or omissions of any Contractor(s), subcontractor or supplier, or of any of the Contractor's agents or employees or any other persons (except ENGINEER's own employees) at the Site or otherwise furnishing or performing any of the Contractor's work; or for any decision made on interpretations or clarifications of the Contract Documents given by CLIENT without consultation and advice of ENGINEER.

L. The General Conditions for any construction contract documents prepared hereunder are to be the "Standard General Conditions of the Construction Contract" as prepared by the Engineers Joint Contract Documents Committee (Document No. 1910-8, 1996 Edition) unless both parties mutually agree to use other General Conditions.

6.02 Authorized Project Representatives

A. Contemporaneous with the execution of this Agreement, ENGINEER and CLIENT shall designate specific individuals to act as ENGINEER's and CLIENT's representatives with respect to the services to be performed or furnished by ENGINEER and responsibilities of CLIENT under this Agreement. Such individuals shall have authority to transmit instructions, receive information, and render decisions relative to the Project on behalf of each respective party.

6.03 Design without Construction Phase Services

A. Should CLIENT provide Construction Phase services with either CLIENT's representatives or a third party, ENGINEER's Basic Services under this Agreement will be considered to be completed upon completion of the Final Design Phase or Bidding or Negotiating Phase as outlined in the Letter Agreement.

B. It is understood and agreed that if ENGINEER's Basic Services under this Agreement do not include Project observation, or review of the Contractor's performance, or any other Construction Phase services, and that such services will be provided by CLIENT, then CLIENT assumes all responsibility for interpretation of the Contract Documents and for construction observation or review and waives any claims against the ENGINEER that may be in any way connected thereto.

6.04 Use of Documents

A. All Documents are instruments of service in respect to this Project, and ENGINEER shall retain an ownership and property interest therein (including the right of reuse at the discretion of the ENGINEER) whether or not the Project is completed.

B. Copies of CLIENT-furnished data that may be relied upon by ENGINEER are limited to the printed copies (also known as hard copies) that are delivered to the ENGINEER. Files in electronic media format of text, data, graphics, or of other types that are furnished by CLIENT to ENGINEER are only for convenience of ENGINEER. Any conclusion or information obtained or derived from such electronic files will be at the user's sole risk.

C. Copies of Documents that may be relied upon by CLIENT are limited to the printed copies (also known as hard copies) that are signed or sealed by the ENGINEER. Files in electronic media format of text, data, graphics, or of other types that are furnished by ENGINEER to CLIENT are only for convenience of CLIENT. Any conclusion or information obtained or derived from such electronic files will be at the user's sole risk.

D. Because data stored in electronic media format can deteriorate or be modified inadvertently or otherwise without authorization of the data's creator, the party receiving electronic files agrees that it will perform acceptance tests or procedures within 60 days,

after which the receiving party shall be deemed to have accepted the data thus transferred. Any errors detected within the 60-day acceptance period will be corrected by the party delivering the electronic files. ENGINEER shall not be responsible to maintain documents stored in electronic media format after acceptance by CLIENT.

E. When transferring documents in electronic media format, ENGINEER makes no representations as to long term compatibility, usability, or readability of documents resulting from the use of software application packages, operating systems, or computer hardware differing from those used by ENGINEER at the beginning of this Project.

F. CLIENT may make and retain copies of Documents for information and reference in connection with use on the Project by CLIENT. Such Documents are not intended or represented to be suitable for reuse by CLIENT or others on extensions of the Project or on any other project. Any such reuse or modification without written verification or adaptation by ENGINEER, as appropriate for the specific purpose intended, will be at CLIENT's sole risk and without liability or legal exposure to ENGINEER or to ENGINEER's Consultants. CLIENT shall indemnify and hold harmless ENGINEER and ENGINEER's Consultants from all claims, damages, losses, and expenses, including attorneys' fees arising out of or resulting therefrom.

G. If there is a discrepancy between the electronic files and the hard copies, the hard copies govern.

H. Any verification or adaptation of the Documents for extensions of the Project or for any other project will entitle ENGINEER to further compensation at rates as defined in Exhibit B.

6.05 Insurance

A. ENGINEER shall procure and maintain insurance as set forth below:

1. Workers Compensation & Employer's Liability
   a. Each Occurrence: $1,000,000

2. General Liability
   a. Each Occurrence: $1,000,000
   b. General Aggregate: $2,000,000

3. Excess or Umbrella Liability
   a. Each Occurrence: $5,000,000
   b. General Aggregate: $5,000,000

4. Automobile Liability
   a. Combined Single Limit (Bodily Injury and Property Damage):
      Each Accident $1,000,000

5. Professional Liability
   a. Each Occurrence: $2,000,000
   b. General Aggregate: $2,000,000

B. CLIENT shall cause ENGINEER and ENGINEER's Consultants to be listed as additional insureds on any general liability or property insurance policies carried by CLIENT which are applicable to the Project.

C. CLIENT shall require Contractor to purchase and maintain general liability and other insurance as specified in the Contract Documents and to cause ENGINEER and ENGINEER's Consultants to be listed as additional insureds with respect to such liability and other insurance purchased and maintained by Contractor for the Project

D. CLIENT and ENGINEER shall each deliver to the other certificates of insurance evidencing the coverage.

E. All policies of property insurance shall contain provisions to the effect that ENGINEER's and ENGINEER's Consultants' interests are covered and that in the event of payment of any loss or damage the insurers will have no rights of recovery against any of the insureds or additional insureds thereunder.

F. At any time, CLIENT may request that ENGINEER, at CLIENT's sole expense, provide additional insurance coverage, increased limits, or revised deductibles that are more protective. If so requested by CLIENT, with the concurrence of ENGINEER, and if commercially available, ENGINEER shall obtain and shall require ENGINEER's Consultants to obtain such additional insurance coverage, different limits, or revised deductibles for such periods of time as requested by CLIENT.

6.06 Termination

A. The obligation to provide further services under this Agreement may be terminated:

1. *For cause,*

a. By either party upon 30 days written notice in the event of substantial failure by the other party to perform in accordance with the terms hereof through no fault of the terminating party.

b. By ENGINEER:

1) upon seven days written notice if ENGINEER believes that ENGINEER is being requested by CLIENT to furnish or perform services contrary to ENGINEER's responsibilities as a licensed professional; or

2) upon seven days written notice if the ENGINEER's services for the Project are delayed or suspended for more than 90 days for reasons beyond ENGINEER's control.

3) ENGINEER shall have no liability to CLIENT on account of such termination.

c. Notwithstanding the foregoing, this Agreement will not terminate as a result of such substantial failure if the party receiving such notice begins, within seven days of receipt of such notice, to correct its failure to perform and proceeds diligently to cure such failure within no more than 30 days of receipt thereof; provided, however, that if and to the extent such substantial failure cannot be reasonably cured within such 30 day period, and if such party has diligently attempted to cure the same and thereafter continues diligently to cure the same, then the cure period provided for herein shall extend up to, but in no case more than, 60 days after the date of receipt of the notice.

2. *For convenience,*

a. By CLIENT effective upon the receipt of notice by ENGINEER.

B. The terminating party under paragraphs 6.06.A.1 or 6.06.A.2 may set the effective date of termination at a time up to 30 days later than otherwise provided to allow ENGINEER to demobilize personnel and equipment from the Site, to complete tasks whose value would otherwise be lost, to prepare notes as to the status of completed and uncompleted tasks, and to assemble Project materials in orderly files.

6.07 Controlling Law

A. This Agreement is to be governed by the law of the state in which the Project is located.

6.08 Successors, Assigns, and Beneficiaries

A. CLIENT and ENGINEER each is hereby bound and the partners, successors, executors, administrators and legal representatives of CLIENT and ENGINEER (and to the extent permitted by paragraph 6.08.B the assigns of CLIENT and ENGINEER) are hereby bound to the other party to this Agreement and to the partners, successors, executors, administrators and legal representatives (and said assigns) of such other party, in respect of all covenants, agreements and obligations of this Agreement.

B. Neither CLIENT nor ENGINEER may assign, sublet, or transfer any rights under or interest (including, but without limitation, moneys that are due or may become due) in this Agreement without the written consent of the other, except to the extent that any assignment, subletting, or transfer is mandated or restricted by law. Unless specifically stated to the contrary in any written consent to an assignment, no assignment will release or discharge the assignor from any duty or responsibility under this Agreement.

C. Unless expressly provided otherwise in this Agreement:

1. Nothing in this Agreement shall be construed to create, impose, or give rise to any duty owed by CLIENT or ENGINEER to any Contractor, Contractor's subcontractor, supplier, other individual or entity, or to any surety for or employee of any of them.

2. All duties and responsibilities undertaken pursuant to this Agreement will be for the sole and exclusive benefit of CLIENT and ENGINEER and not for the benefit of any other party. The CLIENT agrees that the substance of the provisions of this paragraph 6.08.C shall appear in the Contract Documents.

6.09 Dispute Resolution

A. CLIENT and ENGINEER agree to negotiate all disputes between them in good faith for a period of 30 days from the date of notice prior to exercising their rights under provisions of this Agreement, or under law. In the absence of such an agreement, the parties may exercise their rights under law.

B. If and to the extent that CLIENT and ENGINEER have agreed on a method and procedure for resolving disputes between them arising out of or relating to this Agreement, such dispute resolution method and procedure is set forth in Exhibit C, "Supplemental Conditions."

6.10 Hazardous Environmental Condition

A. CLIENT represents to Engineer that to the best of its knowledge a Hazardous Environmental Condition does not exist.

B. CLIENT has disclosed to the best of its knowledge to ENGINEER the existence of all Asbestos, PCB's, Petroleum, Hazardous Waste, or Radioactive Material located at or near the Site, including type, quantity and location.

C. If a Hazardous Environmental Condition is encountered or alleged, ENGINEER shall have the obligation to notify CLIENT and, to the extent of applicable Laws and Regulations, appropriate governmental officials.

D. It is acknowledged by both parties that ENGINEER's scope of services does not include any services related to a Hazardous Environmental Condition. In the event ENGINEER or any other party encounters a Hazardous Environmental Condition, ENGINEER may, at its option and without liability for consequential or any other damages, suspend performance of services on the portion of the Project affected thereby until CLIENT: (i) retains appropriate specialist consultant(s) or contractor(s) to identify and, as appropriate, abate, remediate, or

remove the Hazardous Environmental Condition; and (ii) warrants that the Site is in full compliance with applicable Laws and Regulations.

E. CLIENT acknowledges that ENGINEER is performing professional services for CLIENT and that ENGINEER is not and shall not be required to become an "arranger," "operator," "generator," or "transporter" of hazardous substances, as defined in the Comprehensive Environmental Response, Compensation, and Liability Act of 1990 (CERCLA), which are or may be encountered at or near the Site in connection with ENGINEER's activities under this Agreement.

F. If ENGINEER's services under this Agreement cannot be performed because of a Hazardous Environmental Condition, the existence of the condition shall justify ENGINEER's terminating this Agreement for cause on 30 days notice.

6.11 Allocation of Risks

A. Indemnification

1. To the fullest extent permitted by law, ENGINEER shall indemnify and hold harmless CLIENT, CLIENT's officers, directors, partners, and employees from and against any and all costs, losses, and damages (including but not limited to all fees and charges of engineers, architects, attorneys, and other professionals, and all court or arbitration or other dispute resolution costs) caused solely by the negligent acts or omissions of ENGINEER or ENGINEER's officers, directors, partners, employees, and ENGINEER's Consultants in the performance and furnishing of ENGINEER's services under this Agreement.

2. To the fullest extent permitted by law, CLIENT shall indemnify and hold harmless ENGINEER, ENGINEER's officers, directors, partners, employees, and ENGINEER's Consultants from and against any and all costs, losses, and damages (including but not limited to all fees and charges of engineers, architects, attorneys, and other professionals, and all court or arbitration or other dispute resolution costs) caused solely by the negligent acts or omissions of CLIENT or CLIENT's officers, directors, partners, employees, and CLIENT's consultants with respect to this Agreement or the Project.

3. To the fullest extent permitted by law, ENGINEER's total liability to CLIENT and anyone claiming by, through, or under CLIENT for any cost, loss, or damages caused in part by the negligence of ENGINEER and in part by the negligence of CLIENT or any other negligent entity or individual, shall not exceed the percentage share that ENGINEER's negligence bears to the total negligence of CLIENT, ENGINEER, and all other negligent entities and individuals.

4. In addition to the indemnity provided under paragraph 6.11.A.2 of this Agreement, and to the fullest extent permitted by law, CLIENT shall indemnify and hold harmless ENGINEER and its officers, directors, partners, employees, and ENGINEER's Consultants from and against all costs, losses, and damages (including but not limited to all fees and charges of engineers, architects, attorneys, and other professionals, and all court or arbitration or other dispute resolution costs) caused by, arising out of or resulting from a Hazardous Environmental Condition, provided that (i) any such cost, loss, or damage is attributable to bodily injury, sickness, disease, or death, or to injury to or destruction of tangible property (other than completed Work), including the loss of use resulting therefrom, and (ii) nothing in this paragraph 6.11.A.4. shall obligate CLIENT to indemnify any individual or entity from and against the consequences of that individual's or entity's own negligence or willful misconduct.

5. The indemnification provision of paragraph 6.11.A.1 is subject to and limited by the provisions agreed to by CLIENT and ENGINEER in Exhibit C, "Supplemental Conditions," if any.

6.12 Notices

A. Any notice required under this Agreement will be in writing, addressed to the appropriate party at its address on the signature page and given personally, or by registered or certified mail postage prepaid, or by a commercial courier service. All notices shall be effective upon the date of receipt.

6.13 Survival

A. All express representations, indemnifications, or limitations of liability included in this Agreement will survive its completion or termination for any reason.

6.14 Severability

A. Any provision or part of the Agreement held to be void or unenforceable under any Laws or Regulations shall be deemed stricken, and all remaining provisions shall continue to be valid and binding upon CLIENT and ENGINEER, who agree that the Agreement shall be reformed to replace such stricken provision or part thereof with a valid and enforceable provision that comes as close as possible to expressing the intention of the stricken provision.

6.15 Waiver

A. Non-enforcement of any provision by either party shall not constitute a waiver of that provision, nor shall it affect the enforceability of that provision or of the remainder of this Agreement.

6.16 Headings

A. The headings used in this Agreement are for general reference only and do not have special significance.

6.16 Definitions

A. Defined terms will be in accordance with EJCDC No. 1910-1 (1996 Edition)

This Page is intentionally left blank

CLIENT Initial _____

TAI Initial _____

TROTTER and ASSOCIATES, INC.
ENGINEERS AND SURVEYORS

EXHIBIT B
SCHEDULE OF HOURLY RATES AND REIMBURSABLE EXPENSES

2020 Schedule of Hourly Rates

Classification	Billing Rate
Engineering Intern	$55.00
Engineer Level I	$110.00
Engineer Level II	$122.00
Engineer Level III	$134.00
Engineer Level IV	$149.00
Engineer Level V	$168.00
Engineer Level VI	$195.00
Engineer VII	$205.00
Engineer VIII	$233.00
Principal Engineer	$238.00
Technician Level I	$98.00
Technician Level II	$112.00
Technician Level III	$135.00
Technician Level IV	$147.00
Senior Technician	$162.00
GIS Specialist I	$98.00
GIS Specialist II	$111.00
GIS Specialist III	$151.00
Clerical Level I	$64.00
Clerical Level II	$76.00
Clerical Level III	$88.00
Survey Technician Level I	$66.00
Survey Technician Level II	$79.00
Survey Crew Chief	$161.00
Professional Land Surveyor	$194.00
Department Director	$192.00
Prevailing Wage Survey Foreman**	$185.00
Prevailing Wage Survey Worker**	$181.00
Sub Consultants	Cost Plus 5%

***Rates will be escalated for Overtime & Holiday Pay to adjust for Premium Time based on the current Illinois Department of Labor Rules*

Note: On January 1st of each year, the fees and hourly rates may be escalated by an amount not to exceed five (5) percent.

2020 Reimbursable Expenses

Item	Unit	Unit Price
Engineering Copies 1- 249 Sq. Ft.	Sq. Ft.	$0.29
Engineering Copies 250-999 Sq. Ft.	Sq. Ft.	$0.27
Engineering Copies 1000-3999 Sq. Ft.	Sq. Ft.	$0.25
Engineering Copies 3999 Sq. Ft. & Up	Sq. Ft.	$0.23
Mylar Engineering Copies up to 24" by 36"	Each	$8.00
Color Presentation Grade Large Format Print	Sq. Ft.	$5.15
Comb Binding > 120 Sheets	Each	$4.75
Comb Binding < 120 Sheets	Each	$3.50
Binding Strips (Engineering Plans)	Each	$1.00
5 Mil Laminating	Each	$1.25
Copy 11" x 17" - Color	Each	$0.50
Copy 11" x 17" - Black and White	Each	$0.25
Copy 8.5" x 11" - Color	Each	$0.25
Copy 8.5" x 11" - Black and White	Each	$0.12
Recorded Documents	Each	$25.00
Plat Research		Time and Material
Per Diem	Each Day	$30.00
Field / Survey Truck	Each Day	$45.00
Postage and Freight		Cost
Mileage	Per Mile	Federal Rate

This Page is intentionally left blank

CLIENT Initial _____

TAI Initial _____

EXHIBIT C
SUPPLEMENTAL CONDITIONS

Engineer hereby agrees to incorporate and accept the following provisions to be included in the aforementioned Agreement at no additional compensation:

A. The Engineer agrees to take affirmative steps to assure that disadvantaged business enterprises are utilized when possible as sources of supplies, equipment, construction and services in accordance with the Clean Water Loan Program rules as required by the award conditions of USEPA's Assistance Agreement with the IEPA. The Engineer acknowledges that the fair share percentages are 5% for MBE's and 12% for WBE's.

B. The Engineer shall not discriminate on the basis of race, color, national origin or sex in the performance of this contract. The Engineer shall carry out applicable requirements of 40 CFR Part 33 in the award and administration of contracts awarded under EPA financial assistance agreements. Failure by the contractor to carry out these requirements is a material breach of this contract which may result in the termination of this contract or other legally available remedies.

C. Audit and access to records clause:

1. Books, records, documents and other evidence directly pertinent to performance of PWSLP loan work under this agreement shall be maintained consistent with generally accepted accounting standards in accordance with the American Institute of Certified Public Accountants Professional Standards. The Agency or any of its authorized representatives shall have access to the books, records, documents and other evidence for the purpose of inspection, audit and copying. Facilities shall be provided for access and inspection.

2. Audits conducted pursuant to this provision shall be in accordance with generally accepted auditing standards.

3. All information and reports resulting from access to records pursuant to the above section C.1 shall be disclosed to the Agency. The auditing agency shall afford the engineer an opportunity for an audit exit conference and an opportunity to comment on the pertinent portions of the draft audit report. The final audit report shall include the written comments, if any, or the audited parties.

4. Records under the above section C.1 shall be maintained and made available during performance of project services under this agreement and for 3 years after the final loan closing. In addition, those records that relate to any dispute pursuant to Section 365.650 (Disputes) of Illinois Administrative Code, Title 35, litigation, the settlement of claims arising out of project performance, costs or items to which an audit exception has been taken shall be maintained and made available for 3 years after the resolution of the appeal, litigation, claim or exception.

D. Covenant Against Contingent Fees:

The Engineer warrants that no person or selling agency has been employed or retained to solicit or secure this contract upon an agreement or understanding for a commission, percentage, brokerage, or contingent fee, excepting bonafide employees. For breach or violation of this warranty, the Owner shall have the right to annul this agreement without liability or in its discretion to deduct from the contract price or consideration or otherwise recover, the full amount of such commission, percentage, brokerage, or contingent fee.

E. Certification Regarding Debarment, Suspension and Other Responsibility Matters

The Engineer certifies to the best of its knowledge and belief that it and its principals:

1. Are not presently debarred, suspended, proposed for debarment, declared ineligible, or voluntarily excluded from covered transactions by any federal department or agency;

2. Have not within a three year period preceding this proposal been convicted of or had a civil judgment rendered against them for commission of fraud or a criminal offense in connection with obtaining, attempting to obtain, or performing a public (Federal, State or local) transaction or contract under a public transaction; violation of Federal or State antitrust statutes or commission of embezzlement, theft, forgery, bribery, falsification or destruction of records, making false statements, or receiving stolen property.

3. Are not presently indicted for or otherwise criminally or civilly charged by a government entity (Federal, State or local) with commission of any of the offenses enumerated in paragraph (2) of this certification; and

4. Have not within a three year period preceding this application/proposal had one or more public transactions (Federal, State or local) terminated for cause or default.

The Engineer understands that a false statement on this certification may be grounds for rejection of this proposal or termination of the award. In addition under 18 USC Sec. 1001, a false statement may result in a fine of up to $10,000 or imprisonment for up to 5 years, or both.

CLIENT Initial _____

TAI Initial _____

TROTTER and ASSOCIATES, INC.
ENGINEERS AND SURVEYORS

EXHIBIT D
CONTRACT ADDENDUM

Project Name: Riverside Lift Station Replacement

Project No. STC140

Addendum No._____

This is an addendum attached to, made part of and incorporated by reference into the Agreement between CLIENT and ENGINEER for modification of scope and compensation for the PROJECT. All other terms and conditions of the original Agreement between CLIENT and ENGINEER are unchanged by this Contract Addendum and shall remain in full force and effect and shall govern the obligations of both CLIENT and ENGINEER, including obligations created by this Contract Addendum.

The contract modifications are described below:

1.

2.

3.

CONTRACT SUMMARY

Original Contract Amount	$_____
Changes Prior to This Change	$_____
Amount of This Change	$_____
Revised Contract Amount:	$_____

For purposes of expediency, ENGINEER and CLIENT agree that an executed electronic version of this Contract Addendum shall suffice. The original of this Contract Addendum shall be returned to ENGINEER after execution.

CLIENT:	ENGINEER:
CITY OF ST. CHARLES	TROTTER AND ASSOCIATES, INC.
SIGNED:	
_____	_____
_____	_____
TITLE	TITLE

CLIENT Initial _____

TAI Initial _____

TROTTER and ASSOCIATES, INC.
ENGINEERS AND SURVEYORS

This Page Is Intentionally Left Blank

CLIENT Initial _____

TAI Initial _____

TROTTER and ASSOCIATES, INC.
ENGINEERS AND SURVEYORS

EXHIBIT E
CONCEPTUAL COST ESTIMATE

GENERAL CONDITIONS	$912,500
SITEWORK	$1,677,880
LIFT STATION REPLACEMENT	$3,622,490
ELECTRICAL & CONTROLS	$691,500
CONSTRUCTION SUB-TOTAL	**$6,904,370**
CONTIGENCY @ 25%	**$1,726,093**
ESTIMATED CONSTRUCTION COST	**$8,630,463**
DESIGN ENGINEERING	**$746,002**
CONSTRUCTION ENGINEERING	**$685,208**
PROJECT TOTAL	**$10,061,673**

Description	Quantity	Unit	Unit Price	Total Cost
GENERAL CONDITIONS				
Supervision	12	Mo.	$12,000	$144,000
Record Drawings	1	L.S.	$3,500	$3,500
Disposal Costs	1	L.S.	$30,000	$30,000
Bonds & Insurance	1	L.S.	$60,000	$60,000
Overhead & Profit	1	L.S.	$600,000	$600,000
Electrical Allowance	1	L.S.	$7,500	$7,500
SCADA Allowance	1	L.S.	$7,500	$7,500
Demolition Allowance	1	L.S.	$60,000	$60,000
Bypass Pumping	0	L.S.	$70,000	$0
TOTAL GENERAL CONDITIONS				**$912,500**
SITEWORK				
Excavation and Sheeting	1	L.S.	$176,800	$176,800
Bedrock Removal (including piping and manholes)	230	CY	$300	$69,000
Bedrock Removal (including Lift Station, only)	2,660	CY	$300	$798,000
Backfill	650	Cu. Yd.	$30	$19,500
Demolition - Pumps, Pipe, Electric, etc.	1	L.S.	$120,000	$120,000
Structure Demolition	1	L.S.	$250,000	$250,000
Backfill Existing Structure	1,200	Cu. Yd.	$30	$36,000
Tank Removal and Backfill	1	L.S.	$10,000	$10,000
6" DIP NPW from Line Near Chlorine Bldg.	700	Lin. Ft.	$125	$87,500
Dewatering	1	L.S.	$50,000	$50,000
Pavement	200	Sq. Yd.	$75	$15,000
Bike Path Reroute	120	Sq. Yd.	$9	$1,080
Temporary Facilities and Controls				
Traffic Control on Route 25	1	Mo.	$5,000	$5,000
Restoration	1	L.S.	$20,000	$20,000
Site Electrical	1	L.S.	$20,000	$20,000
TOTAL SITEWORK				**$1,677,880**

CLIENT Initial _____

TAI Initial _____

TROTTER and ASSOCIATES, INC.
ENGINEERS AND SURVEYORS

Description	Quantity	Unit	Unit Price	Total Cost
LIFT STATION REPLACEMENT				
Precast Concrete Manhole	4	Each	$7,000	$28,000
New Concrete Lift Station	680	Cu. Yd.	$1,000	$680,000
Structural Steel for Bridge Crane and Screen Hoists	90	Lin. Ft	$130	$11,700
Process				
NPW System Upgrades at Main Plant				
NPW Pumps	3	Each	$15,000	$45,000
NPW Pump Installation	3	Each	$5,000	$15,000
Booster Pumps at Lift Station	1	Skid	$50,000	$50,000
Hydro-Pneumatic Tank at Lift Station	1	Each	$10,000	$10,000
100 HP Pumps	4	Each	$85,000	$340,000
40 HP Pumps	4	Each	$40,000	$160,000
Guiderails and Base Shoe Installation	1	L.S.	$32,000	$32,000
New Mechanical Screening Equipment	2	Each	$200,000	$400,000
New Screenings Washer/Compactor	2	Each	$111,000	$222,000
48" DIP Gravity Sewer	260	Lin. Ft	$960	$249,600
48" Piping Installation	13	Each	$200	$2,600
27" DIP Gravity Sewer	0	Lin. Ft	$540	$0
24" DIP Force Main Removal	20	Lin. Ft	$80	$1,600
24" DIP Force Main Bypass	60	Lin. Ft	$490	$29,400
24" DIP Force Main, MJ	40	Lin. Ft	$490	$19,600
24" DIP Force Main, FL	120	Lin. Ft	$500	$60,000
24" Fittings	16	Each	$3,000	$48,000
24" Magnetic Flow Meter	1	Each	$10,000	$10,000
24" Piping Installation	26	Each	$600	$15,600
16" DIP Force Main, FL	100	Lin. Ft	$320	$32,000
16" DIP Force Main, MJ	60	Lin. Ft	$320	$19,200
16" Fittings	19	Each	$2,600	$49,400
16" Plug Valves	5	Each	$3,500	$17,500
16" Magnetic Flow Meter	1	Each	$9,000	$9,000
16" Piping Installation	35	Each	$500	$17,500
12" DIP Force Main, FL	160	Lin. Ft	$240	$38,400
12" Fittings	24	Each	$1,700	$40,800
12" Plug Valves	8	Each	$2,500	$20,000
12" Check Valves	8	Each	$4,500	$36,000
12" Piping Installation	50	Each	$400	$20,000
Pipe Paint	1	L.S.	$40,000	$40,000
Architectural				
Brick and Block	4,960	Sq. Ft.	$25	$124,000
Interior Block	5,040	Sq. Ft.	$16	$80,640
Louvers	600	Sq. Ft.	$50	$30,000
Roll Doors	1	Each	$15,000	$15,000
Exterior Double Doors	5	Each	$8,000	$40,000
Exterior Aluminum Doors	4	Each	$6,000	$24,000
Interior Aluminum Doors	2	Each	$6,000	$12,000
Epoxy Flooring	4,000	Sq. Ft.	$15	$60,000
Steel Lintels and Sills	60	Lin. Ft	$20	$1,200
Liquid Water Repellent	4,000	Sq. Ft.	$2	$8,000
Firestopping	1	L.S.	$3,000	$3,000
Bollards	2	Each	$500	$1,000
Access Hatches	8	Each	$4,500	$36,000
Roof Planks	2,400	Sq. Ft.	$11	$26,400
Roof	24	SQ	$245	$5,880
Paint	15,040	Sq. Ft.	$3	$45,120
Fire Extinguishers	3	Each	$450	$1,350
Grating	1,000	Sq. Ft.	$24	$24,000
Toilets and Fixtures	1	L.S.	$10,000	$10,000
Aluminum Stairs	2	Each	$15,000	$30,000
Mechanical				
MOD & Louver	2	Each	$2,000	$4,000
Unit Heaters	8	Each	$2,500	$20,000
Ductwork	200	Lin. Ft	$120	$24,000
Odor Control Unit	1	Each	$200,000	$200,000
Air Conditioner	1	Each	$20,000	$20,000
Bathroom HVAC	1	L.S.	$5,000	$5,000
Floor Drains	20	Lin. Ft	$60	$1,200
1" Condensate Line	20	Lin. Ft	$40	$800
TOTAL LIFT STATION REPLACEMENT				**$3,622,490**

CLIENT Initial _____

TAI Initial _____

TROTTER and ASSOCIATES, INC.
ENGINEERS AND SURVEYORS

Description	Quantity	Unit	Unit Price	Total Cost
ELECTRICAL & CONTROLS				
Interior Lighting	6	Each	$800	$4,800
Interior Explosion-Proof Lighting	8	Each	$2,500	$20,000
Exterior Lighting	5	Each	$2,000	$10,000
Odor Control System	1	Each	$5,000	$5,000
Mechanical Screening Equipment	2	Each	$12,000	$24,000
Screenings Washer/Compactor	1	Each	$8,000	$8,000
Pumps	8	Each	$6,000	$48,000
VFDs	8	Each	$10,000	$80,000
MCC Sections	12	Each	$20,000	$240,000
Conduit & Wire	2,000	Lin. Ft	$30	$60,000
Stand-By Generator	1	Each	$50,000	$50,000
Wire Generator	1	Each	$7,500	$7,500
Automatic Transfer Switch	1	Each	$7,500	$7,500
Wire Automatic Transfer Switch	1	Each	$2,500	$2,500
New Control Panel	1	Each	$45,000	$45,000
PLC Based System	1	L.S.	$40,000	$40,000
Floats	12	Each	$600	$7,200
Submersible Level Transducer	2	Each	$4,000	$8,000
Ultrasonic Level Sensors	4	Each	$4,000	$16,000
Magnetic Flow Meters	2	Each	$4,000	$8,000
TOTAL ELECTRICAL & CONTROLS				**$691,500**

CLIENT Initial _____

TAI Initial _____

TROTTER and ASSOCIATES, INC.
ENGINEERS AND SURVEYORS

This Page Is Intentionally Left Blank

EXHIBIT F
MANHOUR ESTIMATE

	Principal Engineer	Engineer VIII	Engineer VII	Engineer VI	Engineer V	Engineer III	Engineer II	Engineer I	Sr. Technician	Technician Level IV	Technician Level III	Technician Level II	Clerical Level II	PLS	Survey Crew Chief	Department Director	
General Tasks	42	0	0	70	64	272	0	214	0	40	40	40	0	0	0	40	**822**
Preliminary Report	43	0	0	61	83	70	0	0	40	28	0	0	0	0	0	0	**325**
IEPA Loan	2	0	0	4	48	36	0	0	0	0	0	0	0	0	0	0	**90**
Preliminary Design Phase	24	0	0	22	52	84	0	0	32	40	0	0	24	4	24	0	**306**
Design Development Phase	41	96	16	202	32	264	0	80	20	352	0	0	0	0	0	0	**1103**
Final Design Phase	30	152	40	292	16	164	0	116	8	376	0	0	0	0	0	0	**1194**
Design Addendum	0	0	0	0	0	0	0	0	0	0	0	0	0	0	0	0	**0**
Reimbursables	0	0	0	0	0	0	0	0	0	0	0	0	0	0	0	0	**0**
Bidding and Negotiating Phase	8	12	8	30	34	56	0	0	8	24	0	0	0	0	0	0	**180**
Construction Phase	50	50	40	370	0	560	2900	0	8	0	0	88	0	12	40	18	**4136**
Contractor's Completion Documents	8	0	0	36	40	0	84	0	4	0	24	0	0	4	16	0	**216**
Reimbursables	0	0	0	0	0	0	0	0	0	0	0	0	0	0	0	0	**0**
	248	**310**	**104**	**1087**	**369**	**1506**	**2984**	**410**	**120**	**860**	**64**	**128**	**24**	**20**	**80**	**58**	

This Page Is Intentionally Left Blank

ST. CHARLES SINCE 1834	**AGENDA ITEM EXECUTIVE SUMMARY**	Agenda Item number: 5.f
	Title:	Recommendation to Award Bid for City Sanitary Sewer Root Control Program
	Presenter:	Tim Wilson

Meeting: Government Services Committee Date: September 28, 2020

Proposed Cost: $43,574.11	Budgeted Amount: $50,000	Not Budgeted: ☐

Executive Summary (*if not budgeted please explain*)**:**

As part of the CMOM program and general maintenance of the sanitary sewer system, the City conducts a main line sewer root removal program. This work is completed by a contractor using an environmentally safe and IEPA approved root control chemical. The chemical is directly applied to the roots within the sewer system with the general intent to stop root growth. This is in an effort to reduce the risk of main line sewer backup caused by roots. The treatment areas are identified by the CMOM program and City sewer cleaning crews. In general, the City treats about 20,000 linear feet of sanitary sewers annually, with the program continually growing as the sewer system ages.

On August 26, 2020 the City received one (1) bid submittal for the Root Control Program. The sole bidder was Duke's Root Control Inc. City staff has evaluated and approved their submittal. Duke's Root Control has completed the same work for the City over the last five years, and has not had any performance issues with Dukes. The proposed unit cost is slightly higher than last year, but the proposed unit cost is valid for a three-year period with no annual increase.

Based on Duke's past performance and the submitted bid proposal, Staff recommends to award the unit cost contract to Duke's Root Control Inc. The option of two additional years will be exercised at the sole discretion of the City and approval of the fiscal budget and contractor performance.

Attachments (*please list*)**:**

* Proposed Unit Cost

Recommendation/Suggested Action (*briefly explain*)**:**

Recommendation to Award Bid of Sanitary Sewer Root Control unit cost to Duke's Root Control Inc. for a one-year period beginning May 1, 2020 through April 30, 2021, and to authorize staff to exercise the optional second year and third year period beginning May 1, 2021 through April 30, 2023 based on budget approval and contractor performance.

5143 Sewer Root Control Treatment

Duke's Root Control Inc.

PRICE PROPOSAL

#	Name	Unit of Measure	Firm Fixed Price	Quantity for 2020	Extended 2020 Price	Projected 3 year Total Contract Value
1	MOBILIZATION, INCLUDING PERFORMANCE AND PAYMENT BONDS	LUMP SUM	$0	1	$0	$0
2	DEMOBILIZATION	LUMP SUM	$0	1	$0	$0
3	6" SEWER PIPE	LINEAR FOOT	$1.69	0	$0	$0
4	8" SEWER PIPE	LINEAR FOOT	$1.69	12826	$21,675.94	$65,027.82
5	10" SEWER PIPE	LINEAR FOOT	$1.86	1210	$2,250.60	$6,751.80
6	12" SEWER PIPE	LINEAR FOOT	$2.02	2191	$4,425.82	$13,277.46
7	15" SEWER PIPE	LINEAR FOOT	$2.83	629	$1,780.07	$5,340.21
8	18" SEWER PIPE	LINEAR FOOT	$4.07	0	$0	$0
9	21" SEWER PIPE	LINEAR FOOT	$5.04	2667	$13,441.68	$40,325.04
10	24" SEWER PIPE	LINEAR FOOT	$6.45	0	$0	$0
11	27" SEWER PIPE	LINEAR FOOT	$6.45	0	$0	$0
12	36" SEWER PIPE	LINEAR FOOT	$6.45	0	$0	$0
	Total				**$43,574.11**	**$130,722.33**

Comment:

1. **For Line Item Pricing (quantities)**
a. Submit a price for each line item. If there is a "no-bid" for a specific line item, enter $0.
b. The item description on the price proposal page is a brief description for reference only. The full description is detailed in the Questionnaire section of this solicitation.
c. The unit of measure may not be changed.
d. All quantities represent an estimate of the quantity to be ordered. It is for analysis purposes only. The City does not commit to these actual quantities. The City reserves the right to modify the estimates, or remove them in their entirety, whichever is in the best interests of the City.
i. Payment will be based on the actual quantity of work satisfactorily completed, or product delivered and deemed acceptable, at the unit price specified on the successful participating supplier's submittal and the award document.
e. The eProcurement software will automatically calculate all line item pricing into extended and total price.
f. QUANTITIES FOR FISCAL YEARS 21-22 AND 22-23 will be provided when said fiscal budget is approved.

2. **All prices quoted include all fees**. The city will not accept additional costs or surcharges such as, but not limited to: shipping, handling, freight, stocking, delivery, fuel sur-charge, travel, permits, or other.

3. **The Illinois Prevailing Wage Act** (820 ILCS 130/0.01-12) will be applicable for this work.
a. Reference Contract Exhibit F *(attached within contract documents)*
b. Reference Current Prevailing Wages for Kane and DuPage Counties *(attached within contract documents)*
c. Certified Payroll is required to be submitted with each invoice.

ST. CHARLES SINCE 1834	**AGENDA ITEM EXECUTIVE SUMMARY**	Agenda Item number: 5.g
	Title:	Recommendation to Approve Addendum for Professional Service Agreement for the Westside Wastewater Treatment Plant Expansion
	Presenter:	Tim Wilson

Meeting: Government Services Committee	Date: September 28, 2020	
Proposed Cost: $130,800	Budgeted Amount: $176,000	Not Budgeted: ☐

Executive Summary (*if not budgeted please explain*)**:**

The design portion of the Westside Wastewater Treatment project was approved in fall 2019. As a reminder, the existing facility functions at 0.7 million gallons a day (MGD) and is reaching capacity to service existing customer and approved developments. The wastewater project will expand capacity of the facility to 1.05 MGD, serving future developments on the westside of the City and easing demand on the existing facility.

The Wastewater Treatment Facility expansion will require an upgrade to the water distribution system for fire protection. The watermain was not part of the original wastewater expansion design because the State of Illinois had a pending improvement project at the Illinois Youth Center (IYC). The IYC project would have benefited the City's Wastewater Plant by expanding the City's water system. At this time, the State of Illinois has stalled the IYC project and will not be installing the water main need for fire protection at the Westside Wastewater Plant. As a result, the City will have to expand the water distribution system.

The funding source of this project is the Water Pollution Control Loan Program and requires a two-step process for Engineering Procurement based on the qualification's selection. The first step of this process is to issue a Request for Qualifications (RFQ). On March 29, 2019, the City received three (3) RFQ submissions. City staff evaluated the RFQ submittals and ranked the firms based on the standard criteria Trotter and Associates was selected for the designed of the wastewater plant.

There is a cost saving benefit of about $46,000 in using Trotter and Associates for the water main engineering related to the wastewater treatment expansion. Also, using the same engineering firm as the Wastewater Plant Expansion allows the City to easily apply these costs to the IEPA loan program.

Attachments (*please list*)**:**

* Westside Wastewater Plant Expansion Professional Services Agreement Addendum #1

Recommendation/Suggested Action (*briefly explain*)**:**

Recommendation to approve Professional Services Agreement Addendum #1 for the Westside Wastewater Treatment Plant Expansion to Trotter and Associates for $130,800 and a Resolution authorizing the Mayor and Clerk to execute the same on the behalf of the City of St Charles.

CLIENT Initial _____

TAI Initial _____

TROTTER and ASSOCIATES, INC.
ENGINEERS AND SURVEYORS

EXHIBIT D
CONTRACT ADDENDUM

Project Name: West Side WRF Phase III Expansion

Project No. STC130

Addendum No. 1

This is an addendum attached to, made part of and incorporated by reference into the Agreement between CLIENT and ENGINEER for modification of scope and compensation for the PROJECT. All other terms and conditions of the original Agreement between CLIENT and ENGINEER are unchanged by this Contract Addendum and shall remain in full force and effect and shall govern the obligations of both CLIENT and ENGINEER, including obligations created by this Contract Addendum.

The contract modifications are described below:

1. Our services will consist of customary civil engineering and surveying services and related engineering services incidental thereto, described as follows;

    a. Design, bidding, construction and record drawings of approximately 540 LF of 6" water main, 350 LF of 8" DIP water main and 2,820 LF of 10" DIP water main including 6 fire hydrants and 13 valve vaults.

A fixed fee amount of $130,800.00 based on the following assumed distribution of compensation:

Design Engineering Phase	$58,200
Design Engineering Subtotal	$58,200
Construction Engineering Phase	$72,600
Construction Engineering Subtotal	$72,600

CONTRACT SUMMARY

Original Contract Amount	$2,563,800
Changes Prior to This Change	$0
Amount of This Change	$130,800
Revised Contract Amount:	$2,694,600

For purposes of expediency, ENGINEER and CLIENT agree that an executed electronic version of this Contract Addendum shall suffice. The original of this Contract Addendum shall be returned to ENGINEER after execution.

CLIENT:	ENGINEER:
CITY OF ST. CHARLES	TROTTER AND ASSOCIATES, INC.
SIGNED:	
_____	_____
_____	_____
TITLE	TITLE

CLIENT Initial _____

TAI Initial _____

TROTTER and ASSOCIATES, INC.

ENGINEERS AND SURVEYORS

CLIENT Initial _____

TAI Initial _____

TROTTER and ASSOCIATES, INC.
ENGINEERS AND SURVEYORS

This Page Is Intentionally Left Blank

CLIENT Initial _____

TAI Initial _____

TROTTER and ASSOCIATES, INC.
ENGINEERS AND SURVEYORS

EXHIBIT G
WATER MAIN INSTALLATION COST ESTIMATE

WATER MAIN INSTALLATION				
Top Soil Re-spread	1560	Cu.Yd.	$13	$20,280
Seeding	1.5	Acre	$8,000	$12,000
Erosion Control	1	Lump Sum	$12,500	$12,500
Paving (Full Depth) - New	711	Sq Yd	$50	$35,550
Stone Subgrade	711	Sq Yd	$13	$9,243
Piping				$0
Fittings	2600	Lbs.	$10	$26,000
6" DIP Water Main Removal	535	Lin.Ft.	$20	$10,700
8" DIP Water Main	345	Lin.Ft.	$150	$51,750
8" Gate Valve and Vault	2	Each	$5,000	$10,000
10" DIP Water Main	2823	Lin. Ft.	$200	$564,600
10" Gate Valve and Vault	13	Each	$7,000	$91,000
Fire Hydrants, Lead, Isolation Valve	6	Each	$8,500	$51,000
Utility bedding material/aggregate	1408	Cu. Yd	$25	$35,200
Trench Backfill for utilities	533	Cu. Yd	$25	$13,325
Total Water Main Installation				**$943,148**

This Page Is Intentionally Left Blank

CLIENT Initial _____

TAI Initial _____

TROTTER and ASSOCIATES, INC.
ENGINEERS AND SURVEYORS

EXHIBIT H
WATER MAIN INSTALLATION MANHOUR ESTIMATE

	Principal Engineer	Engineer VI	Engineer V	Engineer III	Engineer II	Sr. Technician	Technician Level IV	Clerical Level III	PLS	Survey Crew Chief	
Final Design	54	65	28	16	20	82	4	8	12	40	329
Construction	28	68	0	87	232	32	0	0	12	32	491
	82	133	28	103	252	114	4	8	24	72	

CLIENT Initial _____

TAI Initial _____

TROTTER and ASSOCIATES, INC.
ENGINEERS AND SURVEYORS

This Page Is Intentionally Left Blank

ST. CHARLES SINCE 1834	**AGENDA ITEM EXECUTIVE SUMMARY**	Agenda Item number: 5.h
	Title:	Recommendation to Award Proposal for Sanitary Manhole Rehabilitation Bidding Services and Construction Oversight
	Presenter:	Tim Wilson

Meeting: Government Services Committee Date: September 28, 2020

Proposed Cost: $67,429	Budgeted Amount: $75,000	Not Budgeted: ☐

Executive Summary (*if not budgeted please explain*)**:**

The Sanitary Sewer Manhole Rehabilitation Program is an ongoing Capacity, Management, Operations and Maintenance (CMOM) Program to decrease the amount of inflow and infiltration. This program will repair several manholes extending the service life of the structure within the sanitary system. This year the bid for manhole rehabilitation will cover a single service area of Eastern 2 (see attached map).

The City will work with the engineering team of Engineering Enterprises, Inc. (EEI) in final preparation of bid documents and to review the submitted bids for this project. The projected bid is expected to open in November 2020. After staff makes the recommendation to award the construction contract, EEI will aid with construction oversight and project inspections. The expectation is that this construction project will move forward this upcoming spring season.

EEI was originally awarded the CMOM Professional Service Agreement as part of an RFQ process. In reviewing EEI's proposed rates, contract and quality of professional services on other projects within the City, Staff has determined EEI provides a competitive cost for their engineering services. The proposed contract is hourly not to exceed.

Attachments (*please list*)**:**

* EEI Construction Oversight Proposal * Area Location Maps

Recommendation/Suggested Action (*briefly explain*)**:**

Recommendation to award proposal to Engineering Enterprises, Inc. for 2020 Manhole Rehabilitation Bidding Services and Construction Oversight in an amount of $67,429.

Engineering Enterprises, Inc.

August 27, 2020

Mr. Tim Wilson
Public Works Manager - Environmental Services
City of St. Charles
Two East Main Street
St. Charles, IL 60174

Re: Basin Eastern 2 - 2020 Manhole Rehabilitation
City of St. Charles, Kane & DuPage Cos., IL

Dear Mr. Wilson:

In accordance with your request, enclosed for your review and consideration is our proposed agreement to provide design and construction engineering services for the Basin Eastern 2 - 2020 Manhole Rehabilitation project. The agreement includes a detailed scope of services, estimate of level of effort and associated cost and schedule for the project. We are proposing to conduct a project initiation meeting and one (1) progress review meeting for the design phase of the project, where we will present our progress and discuss the planning efforts with you and other City staff.

We look forward to continuing our outstanding partnership with the City and look forward to working with you and members of your staff on this project. If you have any questions or require any additional information, please do not hesitate to contact me.

Respectfully submitted,

ENGINEERING ENTERPRISES, INC.

Jeffrey W. Freeman

Jeffrey W. Freeman, P.E., CFM, LEED AP
Chief Executive Officer

JWF/kep

Enclosures

pc: Matt Wilson – Environmental Services Division Manager (Via E-mail)
Dave Todd – Environmental Services Assistant Division Manager (Via E-mail)
STD, DMT, ARS, DRA, KEP – EEI (Via E-mail)

52 Wheeler Road, Sugar Grove, IL 60554 ~ (630) 466-6700 tel ~ (630) 466-6701 fax ~ www.eeiweb.com

ATTACHMENT A
AGREEMENT FOR PROFESSIONAL ENGINEERING SERVICES

This Agreement, by and between the City of St. Charles, Kane and DuPage Counites, Illinois, hereafter referred to as the OWNER, and Engineering Enterprises, Inc., Sugar Grove, Illinois hereinafter referred to as the ENGINEER:

The OWNER intends to:

- Rehabilitate Manholes located in Basin Eastern 2

in the City of St. Charles, Kane and DuPage Counties, State of Illinois for which the ENGINEER agrees to perform the various professional engineering services for the design, permitting and construction of said improvements.

WITNESSETH:

That for and in consideration of the mutual covenants and promises between the parties hereto, it is hereby agreed:

SECTION A - PROFESSIONAL DESIGN ENGINEERING SERVICES

The ENGINEER shall furnish professional design engineering as follows:

1. The ENGINEER will attend conferences with the OWNER, or other interested parties as may be reasonably necessary, including:

   (a) One (1) Project Initiation Meeting

   (b) One (1) Progress Review Meeting

2. The ENGINEER will perform the necessary preliminary and design engineering to accomplish the detailed design of the project, prepare construction drawings, specifications, and contract documents, and prepare a final cost estimate based on final design for the entire system. The proposed work items for the design engineering services are as follows:

(Section A – Continued)

(a) DESIGN ENGINEERING

i. Evaluate Manhole Rehab Alternatives
ii. Prepare Base Exhibits
iii. Prepare Draft Front-End Documents
iv. Prepare Draft Technical Specifications
v. Prepare Draft Bid Schedule
vi. Prepare Engineer's Estimate
vii. Complete Draft Project Manual
viii. Coordinate Review and Approval with City
ix. Finalize Project Manual
x. Attend Pre-Bid Meeting
xi. Respond to Inquiries, Prepare and Distribute Addenda, etc.
xii. Attend Bid Opening, Review Bids, Prepare Bid Tabulation

3. The contract documents furnished by the ENGINEER under Section A shall utilize IEPA endorsed construction contract documents, including Supplemental General Conditions, Contract Change Orders, and partial payment estimates.

4. Prior to the advertisement for bids, the ENGINEER will provide for each construction contract, not to exceed 5 copies of detailed drawings, specifications, and contract documents for use by the OWNER, appropriate Federal, State, and local agencies from whom approval of the project must be obtained. The cost of such drawings, specifications, and contract documents shall be included in the basic compensation paid to the ENGINEER.

5. The ENGINEER will furnish additional copies of the drawings, specifications and contract documents as required by prospective bidders, material suppliers, and other interested parties, but may charge them for the reasonable cost of such copies. Upon award of each contract, the ENGINEER will furnish to the OWNER five sets of the drawings, specifications, and contract documents for execution. The cost of these sets shall be included in the basic compensation paid to the ENGINEER. Original documents, survey notes, tracings, and the like, except those furnished to the ENGINEER by the OWNER, are and shall remain the property of the ENGINEER.

(Section A – Continued)

6. The drawings prepared by the ENGINEER under the provisions of Section A above shall be in sufficient detail to permit the actual location of the proposed improvements on the ground. The ENGINEER shall prepare and furnish to the OWNER without any additional compensation, three copies of map(s) showing the general location of needed construction easements and permanent easements and the land to be acquired. Property surveys, property plats, property descriptions, abstracting and negotiations for land rights shall be accomplished by the OWNER, unless the OWNER requests, and the ENGINEER agrees to provide those services. In the event the ENGINEER is requested to provide such services, the ENGINEER shall be additionally compensated as set out in Section D hereof.

7. The ENGINEER will attend the bid opening and tabulate the bid proposal, make an analysis of the bids, and make recommendations for awarding contracts for construction.

8. The ENGINEER further agrees to obtain and maintain, at the ENGINEER's expense, such insurance as will protect the ENGINEER from claims under the Workman's Compensation Act and such comprehensive general liability insurance as will protect the OWNER and the ENGINEER from all claims for bodily injury, death, or property damage which may arise from the performance by the ENGINEER or by the ENGINEER's employees of the ENGINEER's functions and services required under this Agreement.

9. The ENGINEER will complete the Preliminary and Final Design, specifications and contract documents and submit for approval of the OWNER, and all State regulatory agencies to meet the project schedule(s) as summarized in *Attachment C: "Schedule of Work – Basin Eastern 2 - 2020 Manhole Rehabilitation" dated August 24, 2020*.

If the above is not accomplished within the time period specified, this Agreement may be terminated by the OWNER. The time for completion may be extended by the OWNER for a reasonable time if completion is delayed due to unforeseeable cases beyond the control and without the fault or negligence of the ENGINEER.

SECTION B - PROFESSIONAL CONSTRUCTION ENGINEERING SERVICES

The ENGINEER shall furnish professional construction engineering services including but not limited to the following:

1. The proposed work items for the construction engineering services are as follows:
   (a) CONSTRUCTION ENGINEERING SERVICES
      i. Communication and Project Administration
      ii. Attend Pre-Construction Meeting and Construction Progress Meeting
      iii. Review Pay Applications
      iv. Review Shop Drawings, Manhole Inspection Reports and RFI's
      v. Construction Observation (Part-Time for 3-Months) and Punchlist

2. The ENGINEER will review, for conformance with the design concept, shop and working drawings required by the construction Contract Documents and indicate on the drawings the action taken. Such action shall be taken with reasonable promptness.

3. The ENGINEER will interpret the intent of the drawings and specifications to protect the OWNER against defects and deficiencies in construction on the part of the contractors. The ENGINEER will not, however, guarantee the performance by any contractor.

4. The ENGINEER will evaluate and determine acceptability of substitute materials and equipment proposed by Contractor(s).

5. The ENGINEER will establish baselines for locating the work together with a suitable number of benchmarks adjacent to the work as shown in the contract documents.

6. The ENGINEER will provide general engineering review of the work of the Contractor(s) as construction progresses to ascertain that the Contractor is conforming with the design concept.

   (a) ENGINEER shall have authority, as the OWNER's representative, to require special inspection of or testing of the work, and shall receive and review all certificates of inspections, testing and approvals required by laws, rules, regulations, ordinances, codes, orders or the Contract Documents (but only to determine generally that their content complies with requirements of, and the results certified indicate compliance with, the Contract Documents).

(Section B – Continued)

(b) During such engineering review, ENGINEER shall have the authority, as the OWNER's representative, to disapprove of or reject Contractor(s)' work while it is in progress if ENGINEER believes that such work will not produce a completed Project that conforms generally to the Contract Documents or that it will prejudice the integrity of the design concept of the Project as reflected in the Contract Documents.

(c) The ENGINEER will attend construction conferences with the OWNER, the Contractor, or other interested parties as may be reasonably necessary, including:

i. One (1) Pre-Construction Meeting
ii. Three (3) Construction Progress Meetings

7. The ENGINEER will provide part-time (average 10 hours per week over a 3-month construction period) resident construction observation. Resident construction observation shall consist of visual inspection of materials, equipment, or construction work for the purpose of ascertaining that the work is in substantial conformance with the contract documents and with the design intent. Such observation shall not be relied upon by others as acceptance of the work. The ENGINEER's undertaking hereunder shall not relieve the Contractor of Contractor's obligation to perform the work in conformity with the drawings and specifications and in a workmanlike manner; shall not make the ENGINEER an insurer of the Contractor's performance; and shall not impose upon the ENGINEER any obligation to see that the work is performed in a safe manner. Attachment D - The Limitations of Authority, Duties and Responsibilities of the Resident Construction Observer is attached to this Agreement.

8. The ENGINEER will cooperate and work closely with representatives of the OWNER.

9. Based on ENGINEER's on-site observations as an experienced and qualified design professional, on information provided by the Resident Construction Observer, and upon review of applications for payment with the accompanying data and schedules by the Contractor, the ENGINEER:

(a) Shall review Contractors payment requests and supporting documentation (including certified payroll documentation that certifies prevailing wage requirements are being met), determine the amounts owing to Contractor(s) and recommend in writing payments to Contractor(s) in such amounts. Such recommendations of payment will constitute a representation to OWNER, based on such observations and review, that the work has progressed to the point indicated, and that, to the best of the ENGINEER's knowledge, information and belief, the quality of such work is generally in accordance with the Contract Documents (subject to an evaluation of such work as a

(Section B – Continued)

functioning whole prior to or upon substantial completion, to the results of any subsequent tests called for in the Contract Documents, and to any other qualifications stated in the recommendation). By recommending any payment, ENGINEER will not hereby be deemed to have represented that exhaustive, continuous or detailed reviews or examinations have been made by ENGINEER to check the quality or quantity of Contractor(s)' work as it is furnished and performed beyond the responsibilities specifically assigned to ENGINEER in the Agreement and the Contract Documents. ENGINEER's review of Contractor(s)' work for the purposes of recommending payments will not impose on Engineer responsibility to supervise, direct or control such work or for the means, methods, techniques, sequences, or procedures of construction or safety precautions or programs incident thereto or Contractor(s) compliance with laws, rules, regulations, ordinances, codes or orders applicable to their furnishing and performing the work. It will also not impose responsibility on ENGINEER to make any examination to ascertain how or for what purposes any Contractor has used the moneys paid on account of the Contract Price, or to determine that title to any of the work, materials equipment has passed to OWNER free and clear of any lien, claims, security interests, or encumbrances, or that there may not be other matters at issue between OWNER and Contractor that might affect the amount that should be paid.

10. The ENGINEER will prepare necessary contract change orders for approval of the OWNER in accordance with the timeline defined by the OWNER.

11. The ENGINEER shall act as initial interpreter of the requirements of the Contract Documents and judge the acceptability of the work thereunder and make decisions on all claims of OWNER and Contractor(s) relating to the acceptability of the work or the interpretation of the requirements of the Contract Documents pertaining to the execution and progress of the work. ENGINEER shall not be liable for the results of any such interpretations or decisions rendered in good faith or inconsistent with reasonable and sound engineering practices.

12. The ENGINEER will make a final review prior to the issuance of the statement of substantial completion of all construction and submit a written report to the OWNER. Prior to submitting the final pay estimate, the ENGINEER shall submit the statement of completion to and obtain the written acceptance of the facility from the OWNER.

13. The ENGINEER will provide the OWNER with one set of reproducible record (as-built) drawings, and two sets of prints at no additional cost to the OWNER. Such drawings will be based upon construction records provided by the contractor during construction and reviewed by the resident construction observer and from the resident construction observer's construction data.

(Section B – Continued)

14. If State Statutes require notices and advertisements of final payment, the ENGINEER shall assist in their preparation.

15. The ENGINEER will be available to furnish engineering services and consultations necessary to correct unforeseen project operation difficulties for a period of one year after the date of statement of substantial completion of the facility. This service will include instruction of the OWNER in initial project operation and maintenance but will not include supervision of normal operation of the system. In the event the ENGINEER is requested to provide such services, the ENGINEER shall be additionally compensated as set out in Section D hereof. The ENGINEER will assist the OWNER in performing a review of the project during the 11th month after the date of the certificate of substantial completion.

16. The ENGINEER further agrees to obtain and maintain, at the ENGINEER's expense, such insurance as will protect the ENGINEER from claims under the Workman's Compensation Act and such comprehensive general liability insurance as will protect the OWNER and the ENGINEER from all claims for bodily injury, death, or property damage which may arise from the performance by the ENGINEER or by the ENGINEER's employees of the ENGINEER's functions and services required under this Agreement. The ENGINEER further agrees to maintain professional liability insurance, at the ENGINEER's expense, such insurance will protect the OWNER from all claims for errors and omissions in connection with the professional services to be provided under this contract.

17. The ENGINEER will provide Professional Construction Engineering Services on the project in accordance with the periods summarized in *Attachment C: "Schedule of Work - Basin Eastern 2 – 2020 Manhole Rehabilitation – Construction Engineering" dated August 24, 2020*.

If the above is not accomplished within the time period specified, this Agreement may be terminated by the OWNER. The time for completion may be extended by the OWNER for a reasonable time if completion is delayed due to unforeseeable cases beyond the control and without the fault or negligence of the ENGINEER

SECTION C – COMPENSATION FOR ENGINEERING SERVICES

1. The OWNER shall compensate the ENGINEER for the design and construction engineering services for the Hourly Not To Exceed amount of Sixty-Seven Thousand Four Hundred Twenty-Nine Dollars ($67,429) as summarized in Attachment B: "Level of Effort and Associated Cost" dated August 24, 2020.

2. The compensation for any additional engineering services authorized by the OWNER pursuant to Section D shall be payable as follows:

(Section C – Continued)

(a) A sum which equals any charges for work actually completed and invoiced shall be paid at least once per month.

SECTION D – ADDITIONAL ENGINEERING SERVICES

In addition to the foregoing being performed, the following services may be provided UPON PRIOR WRITTEN AUTHORIZATION OF THE OWNER.

1. Laboratory tests, well tests, test wells, specialized geological soils, hydraulic, or other studies recommended by the ENGINEER.

2. Property surveys, detailed description of sites, maps, drawings, or estimates related thereto; assistance in negotiating for land and easement rights.

3. Necessary data and filing maps for litigation, such as condemnation.

4. Redesigns ordered by the OWNER after final plans have been accepted by the OWNER and IEPA.

5. Appearances before courts or boards on matters of litigation or hearings related to the project. Notwithstanding the above, Owner shall have no obligation to pay for said services should said litigation, hearing or arbitration have been brought on account of ENGINEER's negligent acts.

6. Preparation of environmental impact assessments or environmental impact statements.

7. Making drawings from field measurements of existing facilities when required for planning additions or alterations thereto.

8. Services due to changes in the scope of the Project or its design, including but not limited to, changes in size, complexity, schedule, or character of construction.

9. Revising studies or reports which have previously been approved by the OWNER, or when revisions are due to cases beyond the control of the ENGINEER.

10. Preparation of design documents for alternate bids where major changes require additional documents. Major changes shall be generally defined as alternate bids that would require additional design documentation within the plan set (i.e. additional plan views, section views and/or details).

(Section D – Continued)

11. Preparation of detailed renderings exhibits or scale models for the Project.

12. Providing special analysis of the OWNER's needs such as owning and operating analysis, plan for operation and maintenance, OWNER's special operating drawings or charts, and any other similar analysis.

13. The preparation of feasibility studies, appraisals and evaluations, detailed quantity surveys of material and labor, and material audits or inventories by the OWNER.

14. Additional or extended services during construction made necessary by (1) work damaged by fire or other cause during construction, (2) defective or incomplete work of the Contractor, and/or (3) the Contractor's default on the Construction Contract due to delinquency or insolvency.

15. Providing design services relating to future facilities, systems and equipment which are not intended to be constructed or operated as a part of the Project.

16. Providing other services not otherwise provided for in this Agreement, including services normally furnished by the OWNER as described in Section F – SPECIAL PROVISIONS – Owner's Responsibilities.

Payment for the services specified in this Section D shall be as agreed in writing between the OWNER and the ENGINEER prior to commencement of the work. The ENGINEER will render to OWNER for such services an itemized bill, separate from any other billing, once each month, for compensation for services performed hereunder during such period, the same to be due and payable by OWNER to the ENGINEER 30 days after the bill has been received and approved. Payment for services noted in this Section D shall be at Actual Cost (AC), Fixed Fee (FF) or Hourly (HR).

SECTION E - INTEREST ON UNPAID SUMS

OWNER shall make all payments to ENGINEER in accord with the requirements of the Illinois Local Government Prompt Payment Act, 50 ILCS 505/1 et seq., including but not limited to the penalty provisions contained therein.

SECTION F - SPECIAL PROVISIONS

1. OWNER'S RESPONSIBILITIES

   (a) Provide to the ENGINEER all criteria, design and construction standards and full information as to the OWNER's requirements for the Project.

(Section F – Continued)

(b) Designate a person authorized to act as the OWNER's representative. The OWNER or his representative shall receive and examine documents submitted by the ENGINEER, interpret, and define the OWNER's policies and render decisions and authorizations in writing promptly to prevent unreasonable delay in the progress of the ENGINEER's services.

(c) Furnish laboratory tests, air and water pollution tests, reports and inspections of samples, materials or other items required by law or by governmental authorities having jurisdiction over this Project, or as recommended by the ENGINEER.

(d) Provide legal, accounting, right-of-way acquisition and insurance counseling services necessary for the Project, legal review of the construction Contract Documents, and such auditing services as the OWNER may require to account for expenditures of sums paid to the Contractor.

(e) Furnish above services at the OWNER's expense and in such manner that the ENGINEER may rely upon them in the performance of his services under this Agreement and in accordance with the Project timetable.

(f) In the event that the OWNER shall bring any suit, cause of action or counterclaim against the ENGINEER, to the extent that the ENGINEER shall <u>substantially</u> prevail, the party initiating such action shall pay to the ENGINEER the cost and expenses incurred to answer and/or defend such action, including reasonable attorney fees and court costs. In the event that the ENGINEER shall bring any suit, cause of action or counterclaim against the OWNER, to the extent that the OWNER shall <u>substantially</u> prevail, the party initiating such action shall pay to the OWNER the cost and expenses incurred to answer and/or defend such action, including reasonable attorney fees and court costs. In no event shall the ENGINEER <u>or OWNER</u> indemnify any other party for the consequences of that party's negligence, including failure to follow <u>that party's</u> recommendations and direction. <u>In the event a party does not substantially prevail against the other, each party shall pay its own costs, expenses, and reasonable attorney fees.</u>

(g) Guarantee full and free access for the ENGINEER to enter upon all property required for the performance of the ENGINEER's services under this Agreement.

(h) Give prompt written notice to the ENGINEER whenever the OWNER observes or otherwise becomes aware of any defect in the Project or other event which may substantially affect the ENGINEER's performance of services under this Agreement.

(Section F – Continued)

(i) Protect and preserve all survey stakes and markers placed at the project site prior to the assumption of this responsibility by the Contractor and bear all costs of replacing stakes or markers damaged or removed during said time interval.

2. All original documents, including but not limited to ideas, designs, drawings, and specifications, are to remain the property of the ENGINEER, however, the ENGINEER shall provide signed duplicate originals of same to the OWNER. Modifications of any signed duplicate original document not authorized by ENGINEER will be at OWNER's sole risk and without legal liability to the ENGINEER. Use of any incomplete, unsigned document will, likewise, be at the OWNER's sole risk and without legal liability to the ENGINEER.

3. Delegation of Duties - Neither the OWNER nor the ENGINEER shall delegate his duties under this Agreement without the written consent of the other.

4. Extent of Agreement - This Agreement represents the entire and integrated Agreement between the OWNER and the ENGINEER and supersedes all prior negotiations, representations, or agreement, either written or oral. This Agreement may be amended only by written instrument signed by the OWNER and the ENGINEER.

5. Governing Law - Unless otherwise specified within this Agreement, this Agreement shall be governed by the law of the State of Illinois in the Counties of Kane and DuPage.

6. In the event any provisions of this Agreement shall be held to be invalid and unenforceable, the remaining provisions shall be valid and binding upon the parties.

7. The ENGINEER has not been retained or compensated to provide design services relating to the Contractor's safety precautions or to means, methods, techniques, sequences, or procedures required by the Contractor to perform his work but not relating to the final or completed structure; omitted services include but are not limited to shoring, scaffolding, underpinning, temporary retainment of excavations and any erection methods and temporary bracing.

8. The ENGINEER shall render his services under this Agreement in accordance with generally accepted professional practices for the intended use of the Project.

(Section F – Continued)

9. Since the ENGINEER has no control over the cost of labor, materials, equipment or services furnished by others, or over the Contractor(s) methods of determining prices, or over competitive bidding or market conditions, his opinions of probable Project Costs and Construction Costs provided for herein are to be made on the basis of his experience and qualifications and represent his best judgment as an experienced and qualified professional engineer, familiar with the construction industry; but the ENGINEER cannot and does not guarantee that proposals, bids or actual project or construction cost will not vary from opinions of probable cost prepared by him. If prior to the bidding or negotiating phase OWNER wishes greater assurance as to project or construction costs he shall employ an independent cost estimator.

10. TERMINATION

(a) Should the OWNER decide to abandon, discontinue, or terminate the Project at any stage of development, the ENGINEER shall receive seven (7) days written notice and be compensated for their services through the appropriate fee schedule provided for in the Agreement to date of abandonment, discontinuance or termination.

(b) In the event the project is delayed for causes beyond the control of the ENGINEER for a period of six months or more, the ENGINEER shall be paid for his services to the beginning of the delay on the basis of actual cost– “actual cost” being defined as material costs plus actual payrolls, insurance, social security and retirement deductions. Traveling and other out-of-pocket expense will be reimbursed to the ENGINEER at his actual cost.

IN WITNESS WHEREOF, the parties hereto have executed, or caused to be executed by their duly authorized officials, this Agreement in duplicate on the respective dates indicated below.

(SEAL) OWNER: City of St. Charles

By_____

ATTEST_____ Print Name _____

Print Name _____ Title _____

Title _____ Date _____

(SEAL)

ENGINEER: Engineering Enterprises, Inc.

By Jeffrey W. Freeman

ATTEST Angie Smith Print Name Jeffrey W. Freeman, P.E., CFM, LEED AP

Print Name Angie Smith Title Chief Executive Officer

Title Administrative Assistant Date_____

ENGINEERING ENTERPRISES, INC.
CONSULTING ENGINEERS

DATE:	8/27/2020
ENTERED BY:	KEP

ATTACHMENT B:
ESTIMATE OF LEVEL OF EFFORT AND ASSOCIATED COST
PROFESSIONAL ENGINEERING SERVICES
Basin Eastern 2 - 2020 Manhole Rehabilitation
City of St. Charles, Kane & DuPage Cos., IL

WORK ITEM NO.	WORK ITEM	ENTITY:	EEI						WORK ITEM HOUR SUMM.	COST PER ITEM
		PROJECT ROLE:	PRINCIPAL IN CHARGE	PROJECT MANAGER	PROJECT ENGINEER	SENIOR PROJECT TECHN.	PROJECT TECHN.	ADMIN.		
		HOURLY RATE:	$209	$183	$145	$158	$133	$70		
PROJECT FACILITATION & MEETINGS										
1.1	Project Administration		1	3					4	$ 758
1.2	Project Initiation & Design Progress Review Meetings (2 Meetings Total)		6	8	8			3	25	$ 4,088
	Project Facilitation & Meetings Subtotal:		**7**	**11**	**8**	**-**	**-**	**3**	**29**	**$ 4,846**
MANHOLE REHABILITATION DESIGN ENGINEERING										
2.1	Evaluate Manhole Rehab Alternatives		1	4	8				13	$ 2,101
2.2	Prepare Base Exhibits			1	12	1	6		20	$ 2,879
2.3	Prepare Draft Front End Documents			8	20				28	$ 4,364
2.4	Prepare Draft Technical Specifications			4	12				16	$ 2,472
2.5	Prepare Draft Bid Schedule			1	6				7	$ 1,053
2.6	Prepare Engineer's Estimate		1	1	6				8	$ 1,262
2.7	Complete Draft Project Manual		1	1	6		1	1	10	$ 1,465
2.8	Coordinate Review and Approval with City			2	4				6	$ 946
2.9	Finalize Project Manual			2	6		1	1	10	$ 1,439
2.10	Attend Pre-Bid Meeting			3	4				7	$ 1,129
2.11	Respond to Inquiries, Prepare and Distribute Addenda, etc.			4	4			1	9	$ 1,382
2.12	Attend Bid Opening, Review Bids, Prepare Bid Tabulation			3	3				6	$ 984
	Manhole Rehabilitation Design Engineering Subtotal:		**3**	**34**	**91**	**1**	**8**	**3**	**140**	**$ 21,476**
CONSTRUCTION ENGINEERING										
3.1	Communication and Project Administration		1	4					5	$ 941
3.2	Attend Pre-Construction Meeting and Construction Progress Meeting (Bi-weekly)		6	12	16				34	$ 5,770
3.3	Review Pay Applications		1	4	8				13	$ 2,101
3.4	Review Shop Drawings, Manhole Inspection Reports and RFI's		1	12	20				33	$ 5,305
3.5	Construction Observation (Part-Time for 3-Months) and Punchlist		1	24	140		8		173	$ 24,901
									-	$ -
	CONSTRUCTION ENGINEERING Subtotal:		**10**	**56**	**184**	**-**	**8**	**-**	**258**	**$ 39,018**
	PROJECT TOTAL:		**20**	**101**	**283**	**1**	**16**	**6**	**427**	**65,340**

DIRECT EXPENSES	
Printing =	$ 525
Mileage =	$ 500
N/A	$ -
DIRECT EXPENSES =	**$ 1,025**

LABOR EXPENSES	
Engineering Expenses =	$ 63,698
Surveying, Drafting & GIS Technician Expenses =	$ 2,286
Administrative Expenses =	$ 420
TOTAL LABOR EXPENSES =	**$ 66,404**

TOTAL COSTS =	**$ 67,429**

ENGINEERING ENTERPRISES, INC.
CONSULTING ENGINEERS

Attachment C:
SCHEDULE

BASIN EASTERN 2 - 2020 MANHOLE REHABILITATION
CITY OF ST. CHARLES, KANE AND DUPAGE COS., IL

WORK ITEM NO.	WORK ITEM	Year:	2020																							2021																				
		Month:	August					September				October				November					December					January				February				March					April					May				
		Week Starting:	3	10	17	24	31	7	14	21	28	5	12	19	26	2	9	16	23	30	7	14	21	28	4	11	18	25	1	8	15	22	1	8	15	22	29	5	12	19	26	3	10	17	24	31
PROJECT FACILITATION & MEETINGS																																														
1.1	Project Administration																																													
1.2	Project Initiation & Progress Meeting (2 Total Meetings)																																													
MANHOLE REHABILITATION DESIGN ENGINEERING																																														
2.1	Evaluate Manhole Rehab Alternatives																																													
2.2	Prepare Base Exhibits																																													
2.3	Prepare Draft Front End Documents																																													
2.4	Prepare Draft Technical Specifications																																													
2.5	Prepare Draft Bid Schedule																																													
2.6	Prepare Engineer's Estimate																																													
2.7	Complete Draft Project Manual																																													
2.8	Coordinate Review and Approval with City																																													
2.9	Finalize Project Manual																																													
2.10	Attend Pre-Bid Meeting																																													
2.11	Respond to Inquiries, Prepare and Distribute Addenda, etc.																																													
2.12	Attend Bid Opening, Review Bids, Prepare Bid Tabulation																																													
CONSTRUCTION ENGINEERING																																														
3.1	Communication and Project Administration																																													
3.2	Attend Pre-Construction Meeting and Construction Progress Meeting (Bi-weekly)																																													
3.3	Review Pay Applications																																													
3.4	Review Shop Drawings, Manhole Inspection Reports and RFI's																																													
3.5	Construction Observation (Part-Time for 3-Months) and Punchlist																																													

Legend

- Project Administration Work Item(s)
- Meeting(s)
- Design & Analysis Work
- City Review
- EEI Review Item(s)
- Construction Work Item(s)

ATTACHMENT D

to

Agreement for Professional Engineering Services

THE LIMITATIONS OF AUTHORITY, DUTIES AND RESPONSIBILITIES OF THE RESIDENT CONSTRUCTION OBSERVER ARE AS FOLLOWS:

1. The Resident Construction Observer shall act under the direct supervision of the ENGINEER, shall be the ENGINEER's agent in all matters relating to on-site construction review of the Contractor's work, shall communicate only with the ENGINEER and the Contractor (or Contractors), and shall communicate with subcontractors only through the Contractor or his authorized superintendent. The OWNER shall communicate with the Resident Construction Observer only through the ENGINEER.

2. The Resident Construction Observer shall review and inspect on-site construction activities of the Contractor relating to portions of the Project designed and specified by the Engineer as contained in the Construction Contract Documents.

3. Specifically omitted from the Resident Construction Observer's duties are any review of the Contractor's safety precautions, or the means, methods, sequences, or procedures required for the Contractor to perform the work but not relating to the final or completed Project. Omitted design or review services include but are not limited to shoring, scaffolding, underpinning, temporary retainment of excavations and any erection methods and temporary bracing.

4. The specific duties and responsibilities of the Resident Construction Observer are enumerated as follows:

   (a) Schedules: Review the progress schedule, schedule of Shop Drawing submissions and schedule of values prepared by Contractor and consult with ENGINEER concerning their acceptability.

   (b) Conferences: Attend preconstruction conferences. Arrange a schedule of progress meetings and other job conferences as required in consultation with ENGINEER and notify those expected to attend in advance. Attend meetings and maintain and circulate copies of minutes thereof.

   (a) Liason:

      (1) Serve as ENGINEER's liaison with Contractor, working principally through Contractor's superintendent and assist him in understanding the intent of the Contract Documents.

(2) Assist ENGINEER in serving as OWNER's liaison with Contractor when Contractor's operations affect OWNER's on-site operations.

(3) As requested by ENGINEER, assist in obtaining from OWNER additional details or information, when required at the job site for proper erection of the work.

(d) Shop Drawings and Samples:

(1) Receive and record date of receipt of Shop Drawings and samples.

(2) Receive samples which are furnished at the site by Contractor, and notify ENGINEER of their availability for examination.

(3) Advise ENGINEER and Contractor or its superintendent immediately of the commencement of any work requiring a Shop Drawing or sample submission if the submission has not been approved by ENGINEER.

(e) Review of Work, Rejection of Defective Work, Inspections and Tests:

(1) Conduct on-site inspection of the work in progress to assist ENGINEER in determining if the work is proceeding in accordance with the Contract Documents and that completed work will conform to the Contract Documents.

(2) Report to ENGINEER whenever he believes that any work is unsatisfactory, faulty or defective or does not conform to the Contract Documents, or does not meet the requirements of any inspections, test or approval required to be made or has been damaged prior to final payment; and advise ENGINEER when he believes work should be corrected or rejected or should be uncovered for inspection, or requires special testing, inspection or approval.

(3) Verify that tests, equipment and systems start-ups, and operating and maintenance instructions are conducted as required by the Contract Documents and in presence of the required personnel, and that Contractor maintains adequate records thereof; observe, record and report to ENGINEER appropriate details relative to the test procedures and start-ups.

(4) Accompany visiting inspectors representing public or other agencies having jurisdiction over the Project, record the outcome of these inspections and report to ENGINEER.

(f) Interpretation of Contract Documents: Transmit to Contractor ENGINEER's clarifications and interpretations of the Contract Documents.

(g) Modifications: Consider and evaluate Contractor's suggestions for modifications in Drawings or Specifications and report them with recommendations to ENGINEER.

(h) Records:

(1) Maintain at the job site orderly files for correspondence, reports of job conferences, Shop Drawings and samples submissions, reproductions of original Contract Documents including all addenda, change orders, field orders, additional drawings issued subsequent to the execution of the Contract, ENGINEER's clarifications and interpretations of the Contract Documents, progress reports, and other Project related documents.

(2) Keep a diary or log book, recording hours on the job site, weather conditions, data relative to questions of extras or deductions, list of visiting officials and representatives of manufacturers, fabricators, suppliers and distributors, daily activities, decisions, observations in general and specific observations in more detail as in the case of observing test procedures. Send copies to ENGINEER.

(3) Record names, addresses and telephone numbers of all Contractors, subcontractors and major suppliers of materials and equipment.

(i) Reports:

(1) Furnish ENGINEER periodic reports as required of progress of the work and Contractor's compliance with the approved progress schedule and schedule of Shop Drawing submissions.

(2) Consult with ENGINEER in advance of schedule major tests, inspections or start of important phases of the work.

(3) Report immediately to ENGINEER upon the occurrence of any accident.

(j) Payment Requisitions: Review applications for payment with Contractor for compliance with the established procedure for their submission and forward them with recommendations to ENGINEER, noting particularly their relation to the schedule of values, work completed and materials and equipment delivered at the site but not incorporated in the work.

(k) Certificates, Maintenance and Operating Manuals: During the course of the work, verify that certificates, maintenance and operation manuals and other data required to be assembled and furnished by Contractor are applicable to the items actually installed; and deliver this material to ENGINEER for his review and forwarding to OWNER prior to final acceptance of the work.

(l) Completion:

(1) Before ENGINEER issues a Statement of Substantial Completion, submit to Contractor a list of observed items requiring completion or correction.

(2) Conduct final review in the company of ENGINEER, OWNER and Contractor and prepare a final list of items to be completed or corrected.

(3) Verify that all items on final list have been completed or corrected and make recommendations to ENGINEER concerning acceptance.

Standard Schedule of Charges

January 1, 2020

EMPLOYEE DESIGNATION	CLASSIFICATION	HOURLY RATE
Senior Principal	E-4	$214.00
Principal	E-3	$209.00
Senior Project Manager	E-2	$203.00
Project Manager	E-1	$183.00
Senior Project Engineer/Planner/Surveyor II	P-6	$172.00
Senior Project Engineer/Planner/Surveyor I	P-5	$160.00
Project Engineer/Planner/Surveyor	P-4	$145.00
Senior Engineer/Planner/Surveyor	P-3	$133.00
Engineer/Planner/Surveyor	P-2	$121.00
Associate Engineer/Planner/Surveyor	P-1	$109.00
Senior Project Technician II	T-6	$158.00
Senior Project Technician I	T-5	$145.00
Project Technician	T-4	$133.00
Senior Technician	T-3	$121.00
Technician	T-2	$109.00
Associate Technician	T-1	$ 96.00
GIS Technician	G-1	$ 90.00
Engineering/Land Surveying Intern	I-1	$ 79.00
Administrative Assistant	A-3	$ 70.00

VEHICLES. REPROGRAPHICS, DIRECT COSTS, DRONE AND EXPERT TESTIMONY

Vehicle for Construction Observation		$ 15.00
In-House Scanning and Reproduction	$0.25/Sq. Ft. (Black & White) $1.00/Sq. Ft. (Color)	
Reimbursable Expenses (Direct Costs)	Cost	
Services by Others (Direct Costs)	Cost + 10%	
Unmanned Aircraft System / Unmanned Aerial Vehicle / Drone		$ 200.00
Expert Testimony		$ 250.00

52 Wheeler Road, Sugar Grove, IL 60554 ~ (630) 466-6700 tel ~ (630) 466-6701 fax ~ www.eeiweb.com

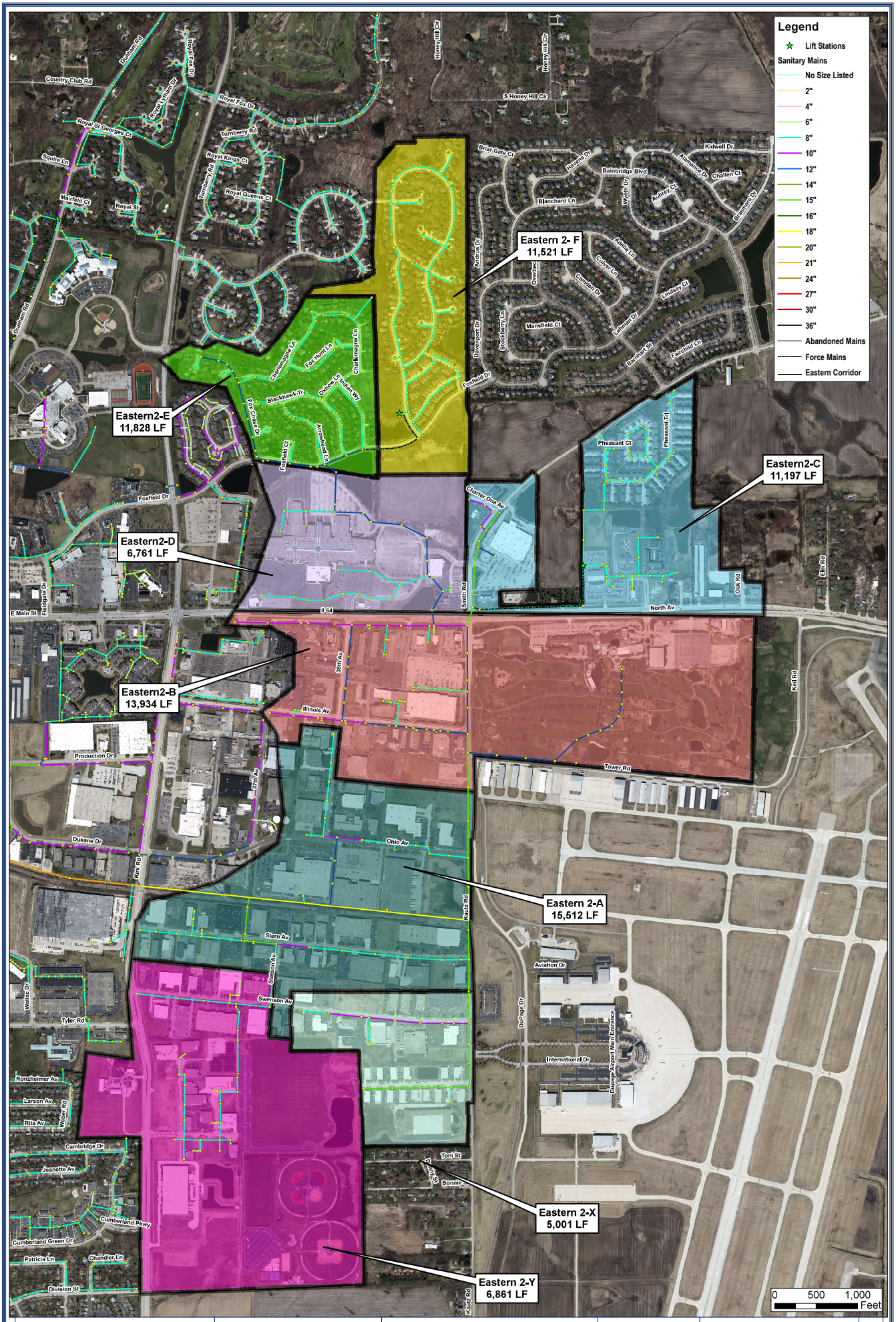

Engineering Enterprises, Inc.
52 Wheeler Road
Sugar Grove, Illinois 60554
(630) 466-6700
www.eeiweb.com

City of St. Charles
2 East Main Street
St. Charles, IL 60174
(630) 377-4400

DATE:	4/28/2020
PROJECT NO.:	
BY:	MJT
PATH:	H:\GIS\Pub\StSaint Charles\2019\SR1902\Eastern 2 Exhibit 1-1 Basin Overview.mxd
FILE:	Eastern 2 Exhibit 1-1 Basin Overview

Somke Testing And Manhole Inspection

Exhibit 1-1
Basin Eastern 2 Phase 2 SSES

N

ST. CHARLES SINCE 1834	**AGENDA ITEM EXECUTIVE SUMMARY**	Agenda Item number: 5.i
	Title:	Recommendation to Approve Consultant Contract for Phase II Design of the Widening and Reconstruction of Kautz Road
	Presenter:	Ken Jay

Meeting: Government Services Committee	Date: September 28, 2020	
Proposed Cost: $219,997	Budgeted Amount: $240,000	Not Budgeted: ☐

Executive Summary (*if not budgeted please explain*)**:**

Kautz Road is a highly traveled collector roadway along the eastern boundary of St. Charles. Kautz Road serves as an eastern access to the City's industrial park, commercial properties along E. Main Street, and as the primary access route to the DuPage Airport. While the majority of Kautz Road was resurfaced in 2016, the section between Commerce Drive and the southern City limit remains in poor condition and in need of reconstruction. Additionally, this section of Kautz Road is currently not classified as a truck route, causing confusion for truck drivers travelling the corridor. The widening of Kautz Road will increase the roadway cross section from a two-lane road to a three-lane section, which will match the pavement sections to the north and south, providing consistency throughout the corridor and setup the roadway section for future industrial development/growth. The project will also include the construction of a multi-use path that will connect to the Prairie Path.

As this section of Kautz Road spans from St. Charles into Geneva, the two municipalities have worked cohesively to plan improvements to the roadway. The Cities jointly selected TranSystems Corporation to complete Phase I design, as well as to assist with grant applications. The project has recently been awarded Surface Transportation Program (STP) grant funding, covering up to 75% of construction and construction engineering costs. The grant funding awarded, split between St. Charles and Geneva, amounts to $2,500,000. With the STP grant funds, St. Charles' estimated share of construction, construction engineering and land acquisition costs is approximately 1.1 million dollars. Note that additional grant funding sources are being pursued, including Illinois Transportation Enhancement Program grant funds, which may reduce the City's overall costs.

Municipal staff from St. Charles and Geneva agree that TranSystems Corporation has performed well during Phase I design, meeting budget and schedule requirements, as well as assisting the Cities with grant funding. The Phase I Request For Qualifications provided the Cities the option of extending services for Phase II design to the selected consultant.

Staff recommends approving a phase II design engineering services contract to TranSystems Corporation of Schaumburg, Illinois, in an amount not to exceed $219,997. Hourly rates provided by TranSystems were consistent with similar design engineering contracts the City has administered in the past, and project man-hours were negotiated by staff.

Phase II design is anticipated to be completed in 2021, with construction anticipated to be completed in 2022.

Attachments (*please list*)**:**

***** Kautz Road Improvements - Location Map

Recommendation/Suggested Action (*briefly explain*)**:**

Recommendation to approve a Design Engineering Services Contract for Phase II Design of the widening and reconstruction of Kautz Road, in an amount not to exceed $219,997.

City of St. Charles, Illinois
Two East Main Street St. Charles, IL 60174-1984
Phone: 630-377-4400 Fax: 630-377-4440 - www.stcharlesil.gov

Kautz Road Reconstruction & Widening

RAYMOND ROGINA *Mayor*
MARK KOENEN *City Administrator*

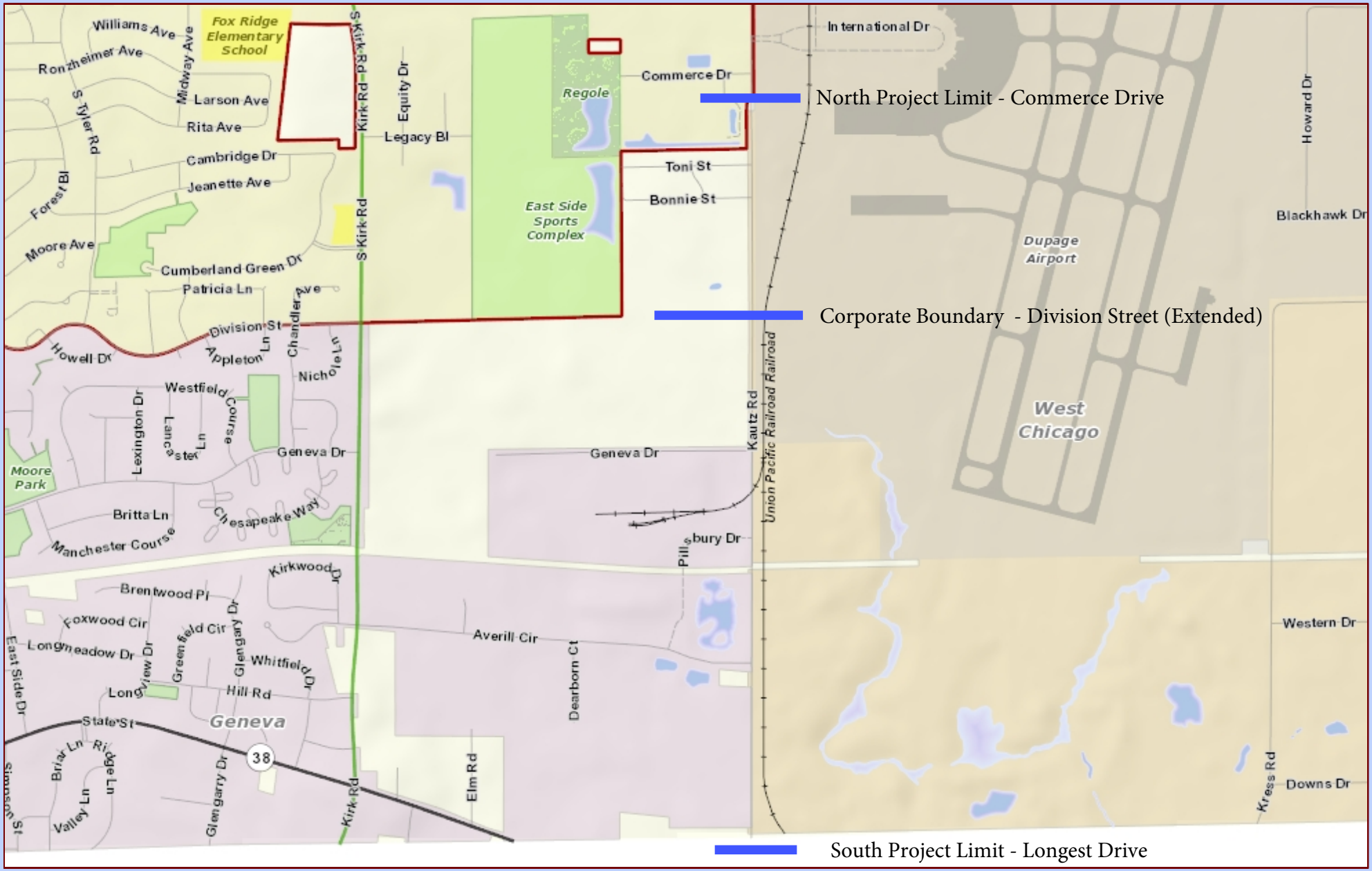

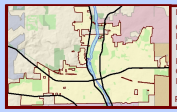

Data Source:
City of St. Charles, Illinois
Kane County, Illinois
DuPage County, Illinois
Projection: Transverse Mercator
Coordinate System: Illinois State Plane East
North American Datum 1983
Printed on: September 12, 2019 12:53 PM

0 667 1,333 Feet

This work was created for planning purposes only and is provided as is, without warranty of any kind, either expressed or implied. The information represented may contain proprietary and confidential property of the City of St. Charles, Illinois. Under United States Copyright protection laws you may not use, reproduce, or distribute any part of this document without prior written permission. To obtain written permission please contact the City of St. Charles at Two East Main Street, St. Charles, IL 60174
Powered by Precision GIS

ST. CHARLES SINCE 1834	**AGENDA ITEM EXECUTIVE SUMMARY**	Agenda Item number: *5.j
	Title:	Recommendation to Waive the Formal Bid Procedure and Approve a Construction Contract for Pavement Repairs to Fairview Drive
	Presenter:	Ken Jay

Meeting: Government Services Committee	Date: September 28, 2020	
Proposed Cost: $36,500	Budgeted Amount:	Not Budgeted: ☒

Executive Summary (*if not budgeted please explain*)**:**

On August 25th, 2020, the public water main experienced a break underneath Fairview Drive, which was recently resurfaced as part of the 2020 MFT rehabilitation program. The main break caused the asphalt pavement section to heave and separate, damaging a large section of the street.

Staff obtained a quote to perform an emergency repair to the asphalt pavement from J.A. Johnson Paving Company, of Arlington Heights, IL. J.A. Johnson recently completed the City's 2020 MFT program and is capable and able to perform the repair.

Staff recommends awarding a contract to J.A. Johnson Paving Company, of Arlington Heights, IL in the amount of $36,500 to repair the asphalt pavement damaged by the water main break underneath Fairview Drive. While this repair was not budgeted, funds are available within the City's water fund to cover the emergency expense.

Attachments (*please list*)**:**

*Bid Waiver Form

Recommendation/Suggested Action (*briefly explain*)**:**

Recommendation to Waive the Formal Bid Procedure and approve a Construction Contract with J.A. Johnson Paving Company for pavement repairs to Fairview Drive in the amount of $36,500.

BID WAIVER

☐ **One Time** ☐ **Today through** _____

Description: Fairview Pavement Repair

Requested Vendor: J.A. Johnson Paving Company

Requested by: Ken Jay Date: 09-28-20

Approvals: _____ _____

Department Head Procurement

Bid Waivers are required when there are unique circumstances related to a proposed procurement that has not been competitively solicited.

1. This procurement is valued at $___$36,500.00_____ for this one time order, and/or

   $_____ for a 12 month period.

2. This good/service has been competitively solicited within the past 24 months. ☐ Yes ✕ No
   If yes: Was the solicitation published on the city website? ☐ Yes ☐ No

3. **Justification for Bid Waiver**

   ☐ **Emergency** i.e. declared by the Mayor and applicable to EOC/FEMA procedures.

   ☐ **Urgent** i.e. required to resolve an unanticipated problem that, if not resolved within 48 hours, may cause undue risk to individuals and/or extensive damage to property.

   ✕ Need for these goods/services were **not anticipated and procurement through normal channels would take too long**.

   ☐ A responsible **contractor was on site** performing a related repair, and, based on professional judgement; it was prudent to request this service/repair from said contractor.

   ☐ These goods are replacement parts for a **warrantied item, and the warranty is still in place**, and purchase of a non-brand item will jeopardize warranty.

   ☐ These goods/services are **inherently related to, and an ongoing part of**, other goods/services previously provided by the Provider.

   ☐ These goods utilize a **proprietary**, **patent, trademark, or customized programing** resulting in lack of competition.

   ☐ These goods are **standardized** for operational safety and efficiency.

   ☐ These goods are only available through the provider's **local distribution** channels.

   ☐ Other:

ATTACH THIS FORM TO FORMAL COUNCIL RECOMMENDATION; OR SCAN TO A/P IN LIEU OF QUOTES

	AGENDA ITEM EXECUTIVE SUMMARY	**Agenda Item Number:** *5.k
	Title:	Recommendation to Approve the Sale of Items of Personal Property owned by the City of St. Charles via an online auction to the highest bidder
	Presenter:	AJ Reineking

Meeting: Government Services Committee **Date**: September 28, 2020

Proposed Cost: $	Budgeted Amount: $	Not Budgeted: ☐

Executive Summary (*if not budgeted please explain*)**:**

Staff is seeking approval to sell and discard obsolete equipment and items of personal property owned by the City of St. Charles via an online auction site.

Attachments (*please list*)**:**

*List of auction items

Recommendation/Suggested Action (*briefly explain*)**:**

Recommendation to approve the Sale of Items of Personal Property owned by the City of St. Charles via an online auction to the highest bidder.

Auction List

- Lot of tools
- Lot of bikes
- Lot of generators
- Lot of miscellaneous automotive parts
- Target Saw
- CAT generator
- Lot of Skidsteer Attachments
- Lot of miscellaneous PD Surplus
- Lot of Environmental Services obsolete processing equipment
- Lot of miscellaneous PD recovered property
- Vehicle #1725 – 2009 Ford Escape
- Vehicle #2013 – 2000 Interstate Trailer

	AGENDA ITEM EXECUTIVE SUMMARY	**Agenda Item Number:** *5.l
	Title:	Recommendation to Amend Exhibit "PL-A" of Chapter 10.40.010 of the City Code to reflect changes to the parking configuration of Municipal Parking Lot "A"
	Presenter:	AJ Reineking

Meeting: Government Services Committee **Date**: September 28, 2020

Proposed Cost: $ N/A	Budgeted Amount: $ N/A	Not Budgeted: ☐

Executive Summary (*if not budgeted please explain*)**:**

Amend Exhibit "PL-A" of Chapter 10.40.010 of the City Code to reflect changes to the parking arrangement of Municipal Parking Lot "A" (formerly known as the Checkerboard Parking Lot).

Attachments (*please list*)**:**

*Exhibit "PL-A" 10.40.010

Recommendation/Suggested Action (*briefly explain*)**:**

Recommendation to Amend Exhibit "PL-A" of Chapter 10.40.010 of the City Code to reflect changes to the parking configuration of Municipal Parking Lot "A".

EXHIBIT "PL-A" 10.40.010

MUNICIPAL PARKING LOT "A"

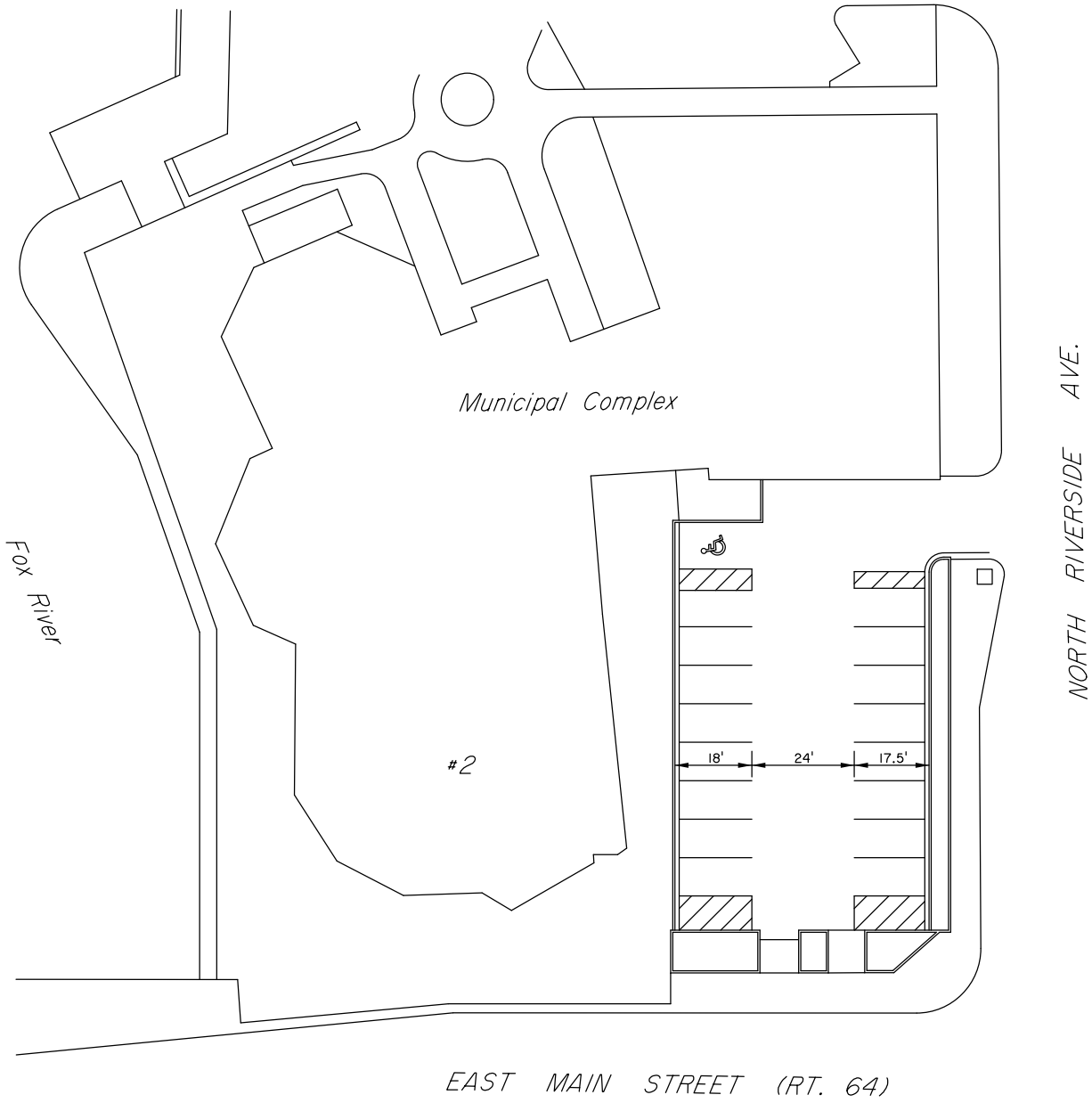

16 PUBLIC PARKING STALLS
1 HANDICAPPED PARKING STALL

3 HOUR PARKING
8:00 AM - 6:00 PM, MON. THROUGH SAT.
EXCEPT HOLIDAYS

N

CHECKER BOARD PARKING LOT

9/8/2020
1"=40'

ST. CHARLES SINCE 1834	**AGENDA ITEM EXECUTIVE SUMMARY**	Agenda Item number: *5.m
	Title:	Recommendation to Approve a Resolution Authorizing Application to the Illinois Transportation Enhancement Program Grant Opportunity
	Presenter:	Ken Jay

Meeting: Government Services Committee	Date: September 28, 2020	
Proposed Cost: n/a	Budgeted Amount: n/a	Not Budgeted: ☐

Each year the state of Illinois offers the Illinois Transportation Enhancement Program (ITEP) grant opportunity. The ITEP typically provides funding for projects that expand travel choices and enhance the transportation experience by improving the cultural, aesthetic and environmental aspects of the intermodal transportation system. Bicycle and pedestrian facilities are an example of typical projects that meet the stated goals of the program.

The City, jointly with the City of Geneva, will be applying for funds to be applied toward the costs associated with the reconstruction and widening of Kautz Road, from Commerce Drive in St. Charles to Geneva Drive in Geneva. Any funding received from the ITEP grant would reduce the City's share of the project, which is preliminarily estimated at 1.1 million dollars after securing Surface Transportation Program grant funding, 18.5% of total project costs.

The 2020 grant application will be requesting a total amount of $700,000 for this project, of which approximately $200,000 would be applied toward St. Charles' share of the project. The ITEP grant would reduce the City's estimated share to approximately $900,000, which equates to 14.7% of total project costs.

Construction is currently planned for 2022.

As part of the application submittal to the State, approval of the attached resolution is required. Staff requests that the City Council approve the resolution to authorize the application of the grant and to allow staff to execute all documents upon receipt of grant monies.

Attachments (*please list*)**:**

* Resolution Authorizing Application to the Illinois Transportation Enhancement Program

Recommendation/Suggested Action (*briefly explain*)**:**

Recommendation to approve a Resolution Authorizing Application to Illinois Transportation Enhancement Program Grant Opportunity and that staff be authorized to execute all necessary documents.

City of St. Charles, Illinois
Resolution No. _____

A Resolution Authorizing Application for Illinois Transportation Enhancement Program Funds and Execution of all Necessary Documents for the Kautz Road Reconstruction and Widening Project

Presented & Passed by the
City Council on _____

WHEREAS, the City of St. Charles has determined that it is in its best interests to submit an application for Illinois Transportation Enhancement Program Funds for the Kautz Road Reconstruction and Widening Project, and;

WHEREAS, said project will include the reconstruction of Kautz Road and widening from a two-lane roadway section to a 3-lane roadway section, and;

WHEREAS, said project will include the construction of a multi-use recreational trail that will connect pedestrian and bicyclists to the Prairie Path in Geneva from IL Route 64.

WHEREAS, improvements to said project will allow Kautz Road to be classified as a truck route from IL Route 38 to IL Route 64, improving traffic flow within the region.

WHEREAS, if the City receives a grant through the Illinois Transportation Enhancement Program, the City certifies that it is willing and able to manage, maintain and operate the project; it possesses legal authority to nominate this project; and will commence within the appropriate timelines.

NOW THEREFORE, be it resolved by the Mayor and City Council of the City of St. Charles, Kane and DuPage Counties, Illinois, as follows:

SECTION ONE: That the City Administrator, or their designee, is hereby authorized to take any and all actions to secure and administer the Illinois Transportation Enhancement Program Grant requested by this resolution.

SECTION TWO: That any changes to the above-stated project description must be approved by the City of St. Charles.

SECTION THREE: This Resolution shall be in full force and effect upon its passage and approval.

PRESENTED to the City Council of the City of St. Charles, Illinois, this _____ day of _____ 2020.

PASSED by the City Council of the City of St. Charles, Illinois, this _____ day of _____ 2020.

APPROVED by the Mayor of the City of St. Charles, Illinois, this _____ day of _____ 2020.

_____
Ray P. Rogina, Mayor

ATTEST:

_____
City Clerk

COUNCIL VOTE:
Ayes:
Nays:
Absent:
Abstain:

CITY OF ST. CHARLES ILLINOIS • 1834	**AGENDA ITEM EXECUTIVE SUMMARY**	**Agenda Item Number:** 6.a
	Title:	Recommendation to Approve a Contract with VirTra Training Simulators for an Annual Subscription Training and Equipment Partnership Agreement for the St. Charles Police Department
	Presenter:	Deputy Chief Mahan

Meeting: Government Services Committee **Date**: September 28, 2020

Proposed Cost: $7,440 Initial and $36,278.71 Annually	Budgeted Amount: $	Not Budgeted: ☒

Executive Summary (*if not budgeted please explain*)**:**
Staff is seeking approval to execute an agreement with VirTra Training Simulators for the VirTra Subscription Training & Equipment Partnership (S.T.E.P.) program. This program will allow for the installation of a state-of-the-art virtual training simulator to be installed in the new police facility
.
Although our officers regularly train for de-escalation techniques, including scenario-based training on a regular on-going basis and many officers also are certified in crisis intervention, this simulator will provide countless opportunities for our officers to be placed in realistic scenarios and situations where they will need to react and make decisions under pressure. The scenarios are built with realistic branching options allow to the scenario to play out based on decisions made by the officer.

This type of training provides the opportunity to employ intervention strategies for police to help individuals in crisis with a goal of minimizing the need for physical or deadly force. The system does also provide opportunity for proficiency training with firearms and less-lethal weapons at a significant cost savings in comparison with the use of live rounds. This simulator would provide scenarios concerning law enforcement response to various types of incidents including: active shooters, disturbances, domestic violence, emotionally disturbed persons, high risk entries, hostage situations, off-duty encounters, suicidal subjects, suspect contacts, and traffic stops. The system provides the officer with immediate performance feedback from the trainer through the system's ability to record all aspects of the officer's tactical skills, verbal skills, judgment, and reaction time. The system also allows for multiple officer scenarios.

This agreement provides for the installation of the VirTra V-180 (3 screens/180 degrees) Simulator System. Contract Price Summary: Initial payments: Setup & Training $5,940.00; Shipping & Handling $1,500.30; Annual Recurring Payment: Annual Contract $36,278.71.

Initially there were discussions about funding this system through the police department building project, however staff is now recommending this expenditure be made through use of law enforcement equipment escrow account funds. Those are funds distributed to the City through court fines/fees, etc.

Attachments (*please list*)**:**
Contract Services and or Delivery of Goods, Solicitation waiver and justification, STEP Agreement VirTra COI, Vendor Ethics and Certification of Compliance, VirTra Product Information

Recommendation/Suggested Action (*briefly explain*)**:**
Recommendation to execute a contract with VirTra Training Simulators for an annual subscription training and equipment Partnership Agreement for the St. Charles Police Department.

St Charles Agreement for Services and/or Delivery of Goods
Simulated Firearm Equipment and Training
Contract

This agreement for services and/or delivery of goods (**"Agreement"**) has been awarded on_____, 20____ by City Council and is between the City of St. Charles, an Illinois home rule municipal corporation (**"City"**), located at 2 East Main Street; St. Charles, Illinois 60174 and **VIRTRA** (**"Contractor"**), located at 7970 S Kyrene Road, Tempe, AZ 85284. City and Contractor are at times collectively referred to hereinafter as the "Parties."

RECITALS

Whereas, the City received a proposal for services and/or delivery of goods entitled **Simulated Firearm Equipment and Training** (**"Services/Good"**) from the contractor on 7/15/2020; and

Whereas, the Contractor the Contractor represents that it is ready, willing and able to perform the services and/or deliver the goods, specified in the proposal; and

Whereas, the proposel was found to meet the City's requirements; and

Whereas, the City awarded the Contractor the Services/Goods, in a total amount of **$188,833.85** to be paid in one (1) start-up payment of $7,440.30 and five (5) equal annual installments of $36,278.71, inclusive of setup, training, shipping, handling, maintenance, support, and training.

Now therefore, in consideration of the foregoing and for the mutual promises hereinafter set forth and for other good and valuable consideration, the sufficiency of which is acknowledged, the parties agree as follows to the following terms and conditions:

Article 1: Contract Documents

A. **Incorporated Documents.** The Contract consists of this Agreement and the following attached exhibits. These attachments along with this Agreement represent the entire integrated contract between the parties and supersede any and all prior negotiations, representations or agreements, written or oral.
   a. Services and/or delivery of goods may not begin until receipt of a City Purchase order. The Contract Name and number, and the Purchase Order Number for the applicable fiscal year, will become the identification number for all transactions during the applicable fiscal year and must be referenced on all related documents, inclusive of invoices.
   b. **Exhibit A** is not applicable
   c. The Contractor's proposal and all related documents is attached as **Exhibit B**
   d. The City's Insurance Requirements and Sample Acord Certificate of Insurance is attached as **Exhibit C**
   e. Change Order Form, which is the sole vehicle authorized to amend contract, is attached as **Exhibit D**

B. **Controlling Document.** In the event of a conflict between this Agreement and any attachment or exhibit, the provisions of this Agreement shall control.

Article 2: Services/Goods Contracted

A. **Scope of Services.** Contractor shall provide Services and/or delivery of goods in accordance with the the Offer submitted by the Contractor [**Exhibit B**].
   a. **Truthful and Accurate.** Contractor represents that such material and information furnished in connection with the Solicitation and this Contract is truthful and accurate.
   b. **Necessary Documentation.** Contractor acknowledges that it has furnished exhibits, as listed previously, and will continue to furnish requested and necessary documentation, including but not limited to certifications, affidavits and other information and reports.

B. **Status of Independent Contractor.** Both City and Contractor agree that Contractor will act as an Independent Contractor in the performance of the Service and/or delivery of goods. Accordingly, the Independent Contractor shall be responsible for payment of all taxes including federal, state, and local taxes arising out of the Contractor's activities in accordance with this Contract, including by way of illustration but not limitation, federal and state income tax, social security tax, and any other taxes or license fees as may be required under the law. Contractor further acknowledges under the terms of this Contract, that it is not an agent, employee, or servant for the City for any purpose, and that it shall not hold itself out as an agent, employee, or servant of the City under any circumstance for any reason. Contractor is not in any way authorized to make any contract, agreement or promise on behalf of the City, or to create any implied obligation on behalf of City, and Contractor specifically agrees that it shall not do so. City shall have no obligation to provide any compensation or benefits to Contractor, except those specifically identified in this Contract. City shall not have the authority to control the method or manner by which Contractor complies with the terms of this Contract.

Article 3: Term

A. **Term.** This Contract becomes effective upon the latter of the date accepted and signed by the City and the date accepted and signed by the Contractor and terminates **five (5) years from the first day of post-implementation** as defined in writing by the City. Alteration in termination may occur prior to completion of Services and/or delivery of goods in accordance with the following conditions.

B. **Termination of Contract.** The City has the right to terminate this Contract, in whole or in part at any time. Written notice of termination is to be served by the City to the Contractor's principal or Contractor's agent personally or by certified or registered mail, return receipt requested. In the event of termination, the City shall pay the Contractor for satisfactory services performed and/or delivery of goods as of the effective date of termination. The effective date of termination releases the City from any obligations under this Contract. Contractor shall deliver to the City any finished and unfinished documents, drawings, studies and reports related to the Service. All such documents, studies and reports shall become the property of the City. The City may terminate this Contract, or any portion of it, as is reasonably necessary in accordance with the following conditions:
   a. **Non-performance.** Non-adherence to the terms of this Contract and its incorporated documents on the part of the Contractor is grounds for termination of the Contract. The City will notify the Contractor in writing with a 24-hour notice specifying the effective date of termination. In the event of termination due to non-performance on the part of the Contractor, the City has the authority to contract with an alternate contractor to complete this Contract. The Contractor shall be liable to the City for all incidental and consequential expenses incurred in procuring and securing an alternate contractor, including any loss due to alternate

contractor compensation. The City may deduct expenses and loss, due to breach, from payment to the Contractor for services already performed or goods already delivered. Failure to deduct expenses and losses from the City's payment to the Contractor does not relieve the contractor from the Terms of this condition nor bar the City from seeking alternative legal remedies.

b. **Unappropriated Funds.** If sufficient funds have not been appropriated to cover the estimated requirement of this Contract, the City may terminate this Contract. The City may terminate for unappropriated funds by serving the Contractor with a fourteen (14) day written notice specifying the effective date of termination. On that specified termination date, this Contract and all contractual obligations will end. If this Contract is terminated by the City for unappropriated funds after performance by the Contractor has commenced, the termination date controls the final invoice by the Contractor for previous services/deliveries under this Contract. The termination date controls all payment obligations of the City to the Contractor. Payment by the City to the Contractor upon termination for unappropriated funds constitutes full satisfaction for services rendered and/or goods delivered.

c. **Convenience.** Termination for convenience does not necessitate a reason. The city may terminate for convenience by serving the contractor with a seven (7) day written notice specifying the effective date of termination. On that specified termination date, this Contract and all contractual obligations will end. If this Contract is terminated by the City for convenience, the termination date controls the final invoice by the Contractor for previous services/deliveries under this Contract. The termination date controls all payment obligations of the City to the Contractor. Payment by the City to the Contractor upon termination for convenience constitutes full satisfaction for services rendered and/or goods delivered.

d. **Force Majeure.** A party shall not be held liable for failure of or delay in performing its obligations under this Contract if failure or delay is a result of an event of outside force, including a natural disaster, "Act of God", act of war, act of terrorism, government sanction or strike that could not be foreseen or avoided by prudence. Once performance is delayed by this event of outside force, the non-performing party must make every reasonable attempt to minimize delay. Once performance has been delayed one-hundred and twenty (120) days, performance is considered impracticable due to impossibility, and either party may terminate this Contract.

C. **Stop Work.** The City may, at any time by written order, require the Contractor to stop all or part of the services and/or delivery of goods as required by this contract. Upon receipt of such an order, the Contractor shall immediately comply with its terms and take all steps to minimize the occurrence of costs applicable to the services and/or delivery goods covered by the order. The City will pay for costs associated with suspension provided they are deemed reasonable by the City.

Article 4: Compensation

A. **Price.** The City shall pay the Contractor for services and/or delivery of goods in accordance with the amounts set forth in [**Exhibit B**]. The maximum price stated on page 1 may not be increased unless the City's Project Manager is provided with supporting documentation to warrant a change, and if upon review and acceptance, a written change order is approved. All change orders shall be by written

schedule on a City Change Order form [**Exhibit D**], and shall be attached as an amendment to this Contract.

B. **Invoicing.** Contractor shall submit an itemized invoice with all supporting documentation as required by the City. Supporting documentation may include, but is not limited to: a supporting schedule making explicit the percentage of completion of services as of the date of the invoice; packing slips for delivered goods; certified payroll; waivers of lien; work orders; and supplier's invoices to justify material mark-up.

C. **Invoice Submittals.** All invoices must be submitted directly to AccountsPayable@stcharlesil.gov and reference Purchase Order number. Invoices submitted in any other manner will result in a delay of payment.

D. **Payment.** The City shall make all payments in accordance with the Illinois Local Government Prompt Payment Act or Contractor's invoice, whichever is more favorable to the City.

   a. **Schedule of Payment.** The City shall make all payments on the basis of approved invoices and supporting documents. The City shall use its best efforts to make payments within thirty (30) days after review and approval of the invoice. Each payment requires City Council's approval of the Expenditure Approval List which occurs at publicly scheduled meetings.

   b. **Non-Payment.** All invoices must be submitted to the City within two (2) months of the Contractor's final performance on this Contract. The City shall not pay any invoices submitted in excess of two (2) months from the date of last performed per this Contract.

Article 5: Duties

A. **Consent and Approvals.** The City and the Contractor represent and warrant to each other that each has obtained all the requisite consents and approvals, whether required by internal operating procedures or otherwise, for entering into this Contract and its contemplated undertakings.

B. **Insurance.** The Contractor performing work shall, during the entire term of this Contract, maintain, at a minimum, the insurance minimums as specified and under the terms stipulated in **Exhibit C**.

   a. The Contractor shall not allow any subcontractor to commence work on this service until the same insurance has been obtained by the subcontractor and the contractor is in receipt of an approved Certificate of Insurance. The Contractor and their Subcontractors shall maintain all insurance for not less than one (1) year after completion of this contract.

C. **Standard of Performance.** Contractor warrants that the service provided under the fully incorporated Contract, by the Contractor and any and all employees, subcontractors, consultants, or agents is performed by individuals who are authorized under all applicable licenses and certifications, and who have completed the requisite training as required by industry standards, professional standards, manufacturers' requirements, and statute. Performance by these parties shall be with the degree, skill, care and diligence customarily required of a professional performing service of comparable scope, purpose and magnitude and in conformance with the applicable industry standards. The Contractor and its employees, subcontractors, consultants, or agents shall perform in strict compliance with the laws and regulations of the City, State, and federal government.

D. **Best Efforts.** The Contractor shall use its best efforts to assure timely and satisfactory rendering and completion of services and deliveries under this Contract. The Contractor shall remain solely responsible for the professional and technical accuracy of all construction and deliverables furnished, whether such service/good is rendered by the material suppliers, fabricators, subcontractors,

consultants or agents. The Contractor is not to be relieved from its duty to use best efforts, pursuant to the Contract, by the City's review, approval, acceptance, or payment for any of the agreed to construction. Any change to the character, form, quality or extent of the Service/good shall be in writing on a City Change Order form, [**Exhibit D**] and attached as an addendum to this Contract.

E. **Non-disclosure.** The Contractor, its employees, subcontractors, consultants, or agents may have access to the City's confidential information during performance of this Contract. Confidential information includes, but is not limited to, methods, processes, formulas, compositions, systems, techniques, computer programs, databases, research projects, resident identification and contact information, financial data, and other data. The Contractor shall not directly or indirectly use, disclose or disseminate confidential information to any third party for any purpose other than a purpose explicitly allowed for in this Contract and its integrated documents.

F. **No Duty.** The contractor shall not imply any authority to act as an agent of the City. The contractor's duties to the City are limited by express authorization under this Contract and by statute.

G. Hold Harmless and Indemnification.

a. **Patents and Copyrights.** Contractor warrants that all products used or provided in the fulfillment of this Contract will not infringe on any United States or foreign patent. Contractor shall indemnify the City against any and all judgments, decrees, legal fees, costs and expenses resulting from such alleged infringement. Contractor will, upon request of the City and at the Contractor's own expense, defend any suit or action which may be brought against the City by reason of any alleged infringement of any patent or copyright in the sale or use of products provided to the City by the Contractor.

b. **Loss and Liability.** The Contractor shall hereby defend and indemnify the City, its directors, agents, officers, employees, and elected officials from and against any and all liabilities, losses, claims, demands, damages, costs, fines, penalties, expenses, judgments, and settlements, including, but not limited to, reasonable attorneys' fees and costs of litigation, and any and all causes of action of any kind or character, that may be incurred as a result of bodily injury, sickness, death, or property damage or as a result of any other claim or suit arising out of or connected with, directly or indirectly, the negligent acts, errors, omissions, or intentional acts or omissions of any agent, employee, subcontractor, consultant, or contractor hired to provide any goods or perform any services on behalf of the Contractor.

Article 6: Policies

A. **Illinois Freedom of Information Act.** The Contractor acknowledges the requirements of the Illinois Freedom of Information Act (FOIA). Contractor agrees to comply with all requests made by the City for public records (as defined in FOIA § 2(c)) in the undersigned's possession and/or their subcontractors/suppliers' possession.

a. **Timeliness.** The Contractor shall provide the requested public records to the City within two (2) business days of the City's request.

b. **Free of Charge.** The Contractor agrees not to apply any costs or charge any fees to the City for the procurement of the requested records pursuant to a FOIA request.

c. **Hold Harmless.** Should the Contractor deny the City's request unlawfully or request that the City utilize a lawful exemption available under FOIA, Contractor agrees to pay any and all costs connected with the defense of the Contractor's denial. All costs include reasonable attorney

and witness fees, filing fees and other expenses related to the defense of a complaint. The Contractor agrees to indemnify the City against any and all claims, costs, penalties, losses and injuries arising out of or relating to its failure to provide the requested public records to the City under this Contract.

B. **Suppliers and Subcontractors**. The contractor may subcontract portions of the materials and work.
   a. These Material Suppliers and Subcontractors, Consultants, and Agents shall conform, in all respects, to the applicable provisions specified, inclusive but not limited to, insurance requirements and prevailing wage.
   b. Material Suppliers, Subcontractors, Consultants, and Agents may not be transferred to any other party or parties without the written consent of the City.

C. Discrimination Prohibited.
   a. **Equal Employment Opportunity.** Contractor shall comply with all rules and regulations pertaining to public contracts adopted by the State and the City. The City is an equal opportunity employer.
   b. **ADA.** Contractor shall be in compliance with current applicable regulations of the Americans with Disabilities Act.

Article 7: Changes to Contract

A. **Changes and Alterations**. Any changes or alterations to this Service and/or delivery of goods, inclusive of but not limited to: scope, cost, terms, milestones, deadlines or other significant factors; shall be integrated in writing on a City of St. Charles Change Order form. [**Exhibit D**]

B. **Extension or Renewal of Contract.** The City at its option may extend this Contract for an additional to be determined term if the Contractor either reduces his price, or holds firm to the proposal prices, conditions and specifications.

C. **Assignment.** Contractor shall not assign, transfer, or subcontract this Contract, in whole or in part, without prior written consent of the City.

D. **Notification.** All notification under this Agreement shall be made as follows:
   a. **If to the City**
      City of St. Charles
      Attn: Procurement Division Manager
      2 East Main Street
      St. Charles, IL 60174
      Fax: 630.377.4487
      Email: Procurement@stcharlesil.gov
      Phone: 630.762.6936

   b. **With electronic copies to**
      Procurement Division Manager: Joan M. Schouten; Procurement@stcharlesil.gov
      Project Manager: Erik Mahan; emahan@stcharlesil.gov

      If to the Contractor
      Sales Representative: Steve Diiullo; Steve.diiullo@virtra.com
      Customer Success Contact: Mike Rysiewicz; mrysiewicz@virtra.com
      Accounting/Contracts: Nichieli Ferris; nferris@virtra.com

Article 8: Applicability

A. **Other Entity Use.** The Contractor may, upon mutual agreement with any municipality or governmental unit, permit that unit to participate in this Contract for substantially similar project services and/or delivery of goods under the same or more favorable price, terms and conditions.

B. **Waiver.** Any failure of either the City or the Contractor to strictly enforce any terms, rights, or conditions of this Contract, whether implied or expressed, shall not be construed as a waiver of such terms, rights, or conditions.

C. **Severability.** If any provision of this Contract is held to be illegal, invalid, or unenforceable, such provision shall be fully severable, and this Contract shall be construed and enforced as if such illegal, invalid, or unenforceable provision were never a part hereof; the remaining provisions hereof shall remain in full force and effect and shall not be affected by the illegal, invalid, or unenforceable provision or by its severance; and in lieu of such illegal, invalid, or unenforceable provision there shall be added automatically as part of this, a provision as similar in its terms to such illegal, invalid, or unenforceable provision as may be possible and legal, valid and enforceable.

D. **Governing Jurisdiction.** The parties agree that any disputes, disagreements, or litigation arising from this Contract, between or amongst them, will be heard and resolved exclusively in the courts of the 16th Judicial Circuit, Kane County, Illinois.

E. **Governing Law.** The parties agree that the laws of the State of Illinois govern this Contract.

THIS SPACE INTENTIONALLY LEFT BLANK

In Witness Whereof, the parties have entered into this Contract upon the latter of the date accepted and signed by the City and the date accepted and signed by the Contractor.

For: City of St. Charles

By: _____
Project Manager

ATTEST_____

DATE_____

_____
Joan M. Schouten; Procurement Division Manager

For: Professional Service Provider

If an Individual
By: _____
Signature

_____
Title

If a Partnership
By: _____
Signature

_____
Title

By: _____
Partner

If a Corporation
By: _____
Signature of person authorized to sign

Director of US Sales
Title

ATTEST_____

If a Joint Venture
By: _____
Signature

_____
Title

By: _____
Signature

_____
Title

DATE 17 September, 2020

CONTRACT EXHIBIT B

VirTra

7970 S Kyrene Road, Tempe, AZ 85284 USA | TOLL FREE: 800.455.8746 PH: 480.968.1488 FAX: 480.968.1448 | VIRTRA.COM

Account Name	St. Charles Police Department	Created Date	7/15/2020
Contact Name	Erik Mahan	Quote Number	00002816
Phone	(630) 377-4435	Expiration Date	10/30/2020
Email	emahan@stcharlesil.gov		
Ship To Name	St. Charles Police Department	Prepared By	Steve Dilullo
VirTra STEP Annual Contract Offering		Phone	(480) 968-1488
		Email	steve.diiullo@virtra.com

VIRTRA, INC.

SIMULATED FIREARM EQUIPMENT
AND TRAINING SERVICES AGREEMENT

AGREEMENT: Simulated Firearm Equipment and Training Services Agreement (the "Agreement") is made and entered by and between the organizations or entities set forth below to provide Agency with certain hardware, software, documentation, installation, training, maintenance, and support (collectively, the "System").

CONTRACT PRICE SUMMARY:

Contract initiation payments (one time.)

Setup & Training:	$5,940.00
S&H	$1,500.30

Annual Recurring Payment:

Annual Contract Rate (STEP)	$36,278.71

TERM: This Agreement will become effective upon the date the customer receives and accepts control over a substantial portion of the equipment listed on Exhibit D and services listed on the System Acceptance Checklist (Exhibit C) but not more than 90 days after Contract execution date. Unless terminated as set forth herein, this Agreement shall remain in force for a period of twelve (12) months (the "Term") from the Effective Date. After the Term, this Agreement will be renewed for additional periods of twelve (12) months (each a "Renewal Term"), up to a total aggregated term of sixty (60 months), unless and until one party provides the other party with written notice of termination at least sixty (60) days prior to the end of the Term, or any subsequent Renewal Term.

EXHIBITS: The following exhibits are incorporated herein by reference and form a material part of this Agreement.

Exhibit A: General Terms and Conditions.
Exhibit B: Maintenance and Support Agreement.
Exhibit C: System Acceptance Check List.
Exhibit D: Services, Equipment, and Pricing Summary

SIGNATURES: By signing below, each signatory warrants and represents that he/she executed this Agreement in his/her authorized capacity, that he/she has the authority to bind the entity listed below to contractual obligations and that by his/her signature on this Agreement, the entity on behalf of which he/she acted, executed this Agreement.

FOR AGENCY

_____ _____

Signature Date

VirTra
7970 S Kyrene Road, Tempe, AZ 85284 USA | TOLL FREE: 800.455.8746 PH: 480.968.1488 FAX: 480.968.1448 | VIRTRA.COM

Printed Name and Title

FOR VIRTRA

Signature

17 September, 2020
Date

Ryan C Bray, Director of US Sales
Printed Name and Title

7970 South Kyrene Road
Tempe, AZ 85284
(480) 968-1488

EXHIBIT A

VIRTRA, INC.
AGREEMENT FOR SIMULATED FIREARM EQUIPMENT AND TRAINING SERVICES

GENERAL TERMS AND CONDITIONS

1. NON-EXCLUSIVE AGREEMENT
The Agreement does not establish an exclusive contract between the Agency and VirTra. Each party expressly reserves rights to, without limitation, the following: the right to utilize others to provide products, support and services; the right to request proposals from others with or without requesting proposals from VirTra; and the unrestricted right to bid and supply any such product, support or service.

2. PRODUCTS AND SERVICES
VirTra agrees to provide the Agency with the System, including all goods and services in accordance with the terms and conditions set forth in the Agreement, including all Exhibits that are attached to the Agreement and incorporated herein, as well as all necessary manpower and other necessary resources.

ANY ADDITIONAL OR DIFFERENT TERMS OR QUALIFICATIONS, INCLUDING, WITHOUT LIMITATION, ELECTRONICALLY OR IN MAILINGS, ATTACHED TO INVOICES OR WITH ANY GOODS SHIPPED, SHALL NOT BECOME PART OF THE CONTRACT BETWEEN THE PARTIES. THE PARTIES AGREE THAT ALL TERMS AND CONDITIONS ARE SET FORTH IN THIS AGREEMENT.

Employees and agents of VirTra, shall, while on the premises of the Agency, comply with all rules and regulations of the premises, including, but not limited to, security requirements.

If required, VirTra shall be responsible for installation, training and knowledge transfer activities in relation to the goods being supplied, as set forth in Exhibit B to this Agreement.

All equipment shall be delivered to a Agency site specified in the contract release purchase order, or if not so specified therein, as otherwise agreed by the parties in writing.

Upon any termination or expiration of this Agreement, the System and all other related materials provided to Agency hereunder shall be returned to VirTra or, at VirTra's option, VirTra may arrange for pickup of the System and related materials. The System and related materials must be returned to VirTra in good repair and functionality, considering reasonable wear and tear.

VirTra shall provide the System and perform work in a professional manner consistent with, at a minimum, general industry standards.

3. NECESSARY ACTS AND FURTHER ASSURANCES
The parties agree that they shall cooperate and execute and deliver such further documents and instruments and shall take such other actions as may be reasonably required or appropriate to evidence or carry out the intent and purposes of this Agreement.

4. COUNTING DAYS
Days are to be counted by excluding the first day and including the last day, unless the last day is a Saturday, a Sunday, or a legal holiday, and then it is to be excluded.

5. PRICING

Unless otherwise stated, prices shall be fixed for the first year of the Agreement, with increases in payments in subsequent years to be mutually agreed by the parties in writing. If any product listed in this Agreement is discontinued or upgraded prior to delivery, VirTra shall extend the same pricing towards a comparable replacement that is functionally equivalent or an upgraded version.

Exhibit D of the Agreement is the basis for pricing and compensation throughout the term of the Agreement.

6. MODIFICATION

This Agreement or any contract release purchase order may be supplemented, amended, or modified only by the mutual agreement of the parties. No supplement, amendment, or modification of this Agreement contract release purchase order will be binding on Agency unless it is in writing and signed by am authorized representative of the Agency.

7. HAZARDOUS SUBSTANCES

If any product being offered, delivered or supplied to the Agency is listed in the Hazardous Substances List of the Regulations of the Occupational Safety and Health Administration, or if the product presents a physical or health hazard, VirTra must include a Material Safety Data Sheet (MSDS) with delivery, or shipment. Each MSDS must reference the contract/purchase order number, and identify the “Ship To Address”. All shipments and containers must comply with the labeling requirements of Title 49, Code of Federal Regulations by identifying the hazardous substance, name and address of manufacturer, and appropriate hazard warning regarding potential physical safety and health hazard.

8. SHIPPING AND RISK OF LOSS

Goods shall be packaged, marked and otherwise prepared by VirTra in suitable containers in accordance with sound commercial practices. VirTra shall include an itemized packing list with each shipment and with each individual box or package shipped to the Agency. The packing list shall contain, without limitation, the applicable contract release purchase order number.

Unless otherwise specified in writing, all shipments by VirTra to Agency will be F.O.B. point of destination. Freight or handling charges are not billable unless such charges are referenced on the order. Transportation receipts, if required by contract release purchase order, must accompany invoice. Regardless of F.O.B. point, VirTra agrees to bear all risks of loss, injury, or destruction to goods and materials ordered herein which occur prior to delivery at Agency’s destination; and such loss, injury or destruction shall not release VirTra from any obligation hereunder.

9. INSPECTION AND RELATED RIGHTS

All goods and services are subject to inspection, testing, approval and acceptance by the Agency. Inspection shall be made within prior to execution of the System Acceptance Checklist, shown in Exhibit C.

In the event that VirTra’s goods are not accepted by Agency due to a material breach by VirTra, VirTra shall be liable to remedy, repair, or replace the rejected goods.

The rights and remedies of Agency provided herein shall not be exclusive and are in addition to any other rights and remedies provided by law. The acceptance by Agency of late or partial performance with or without objection or reservation shall not waive the right to claim damage for such breach nor constitute a waiver of the rights or requirements for the complete and timely performance of any obligation remaining to be performed by VirTra, or of any other claim, right or remedy of the Agency.

Agency’s acceptance of the goods and services offered by VirTra hereunder shall be evidenced by an authorized signature on Exhibit C.

10. ADJUSTMENT BY COMPANY

The Agency reserves the right to waive a variation in specification of goods or services supplied by VirTra. VirTra may request an equitable adjustment of payments to be made by Agency if Agency requires a change in the goods or services to be delivered. Any claim by VirTra for resulting adjustment of payment must be asserted within thirty (30) days from the date of receipt by VirTra of the notification of change required by Agency.

11. INVOICING

VirTra shall invoice Agency on a periodic basis, in accordance with the pricing set forth in Exhibit B of the Agreement. Invoices shall be sent to the Agency customer or department referenced above or such other person or address as the Agency may provide to VirTra, in writing, from time to time. Invoices for goods or services not specifically listed in the Agreement will not be approved for payment.

Invoices shall include: VirTra’s complete name and remit-to address; invoice date, invoice number, and payment term; Agency contract number; pricing per the Agreement; applicable taxes; and total cost.

VirTra and Agency shall make reasonable efforts to resolve all invoicing disputes within seven (7) days.

12. AVAILABILITY OF FUNDING

The Agency’s obligation for payment of any fees or charges beyond the Initial Term is contingent upon the availability of funding and upon appropriation for payment to VirTra.

13. PAYMENT

The Agency’s standard payment term shall be Net 30, unless otherwise agreed to by the parties. Payment shall be due thirty (30) days from the date of receipt of each invoice issued hereunder.

14. OTHER PAYMENT PROVISIONS

Notwithstanding anything to the contrary, Agency shall not make payments prior to receipt of service or goods (i.e. the Agency will not make "advance payments").

Sales tax shall be noted separately on every invoice. Items that are not subject to sales tax shall be clearly identified.
VirTra shall be responsible for payment of all state and federal taxes assessed on the compensation received under this Purchase Order and such payment shall be identified under VirTra's federal and state identification number(s).

15. TERMINATION FOR CAUSE

Either party may terminate this Agreement or any contract release purchase order, in whole or in part, for cause upon thirty (30) days written notice to the other party. For purposes of this Agreement, cause includes, but is not limited to, any of the following: (a) material breach of this Agreement or any contract release purchase order, (b) violation by a party of any applicable laws or regulations; or (c) assignment or delegation by a party of the rights or duties under this Agreement without the written consent of the other party.

In lieu of terminating immediately upon default, the non-defaulting party may, at its option, provide written notice specifying the cause for termination and allow the defaulting party ten (10) days (or other specified time period in the written notice) to cure. If, within ten (10) days (or other specified time) after such notice has been given, the defaulting party has not cured the default to the reasonable satisfaction of the non-defaulting party, or if the default cannot be reasonably cured within that time period, the non-defaulting party may terminate this Agreement at any time thereafter.

16. TERMINATION FOR BANKRUPTCY

If VirTra is adjudged to be bankrupt or should have a general assignment for the benefit of its creditors, or if a receiver should be appointed on account of VirTra's insolvency, the Agency may terminate this Agreement immediately without penalty. For the purpose of this Section, bankruptcy shall mean the filing of a voluntary or involuntary petition of bankruptcy or similar relief from creditors; insolvency; the appointment of a trustee or receiver, or any similar occurrence reasonably indicating an imminent inability to perform substantially all of the party's duties under this Agreement.

17. DISPUTES

Except as otherwise provided in this Agreement, any dispute arising under this contract that is not disposed of by agreement shall be subject to mediation and then binding arbitration.

18. ACCOUNTABILITY

VirTra will be the primary point of contact for the manufacturer, deliverer or any subcontractors and assume the responsibility of all matters relating to the purchase, including those involving the manufacturer and deliverer or any subcontractor, as well as payment issues. If issues arise, VirTra must take immediate action to correct or resolve the issues.

19. NO ASSIGNMENT, DELEGATION OR SUBCONTRACTING WITHOUT PRIOR WRITTEN CONSENT

VirTra may not assign any of its rights, delegate any of its duties or subcontract any portion of its work or business under this Agreement or any contract release purchase order without the prior written consent of Agency. Notwithstanding the foregoing, VirTra may transfer it rights and obligations under this Agreement in conjunction with a sale of all or substantially all of VirTra's assets.

20. MERGER AND ACQUISITION

The terms of this Agreement will survive an acquisition, merger, divestiture or other transfer of rights involving VirTra. In the event of an acquisition, merger, divestiture or other transfer of rights VirTra must ensure that the enquiring entity or the new entity is legally required to:

A. Honor all the terms negotiated in this Agreement and any pre-acquisition or pre-merger Agreement between VirTra and the Agency, including but not limited to: a) established pricing and fees; b) product support and maintenance until the contract is terminated; and c) no price escalation during the term of the Agreement.

B. If applicable, provide the functionality of the software in a future, separate or renamed product, if the acquiring entity or the new entity reduces or replaces the functionality, or otherwise provide a substantially similar functionality of the current licensed product. The Agency will not be required to pay any additional license or maintenance fee.

C. Give the Agency prompt written notice following the closing of an acquisition, merger, divestiture or other transfer of rights involving VirTra.

21. COMPLIANCE WITH ALL LAWS & REGULATIONS

VirTra shall comply with all laws, codes, regulations, rules and orders (collectively, "Regulations") applicable to the goods and/or services to be provided hereunder. VirTra's violation of this provision shall be deemed a material default by VirTra, giving Agency the right to terminate the Agreement. Examples of such Regulations include but are not limited to Occupational Safety and Health Act of 1970 and the standards and regulations issued there under. VirTra agrees to indemnify and hold harmless the Agency for any loss, damage, fine, penalty, or any expense whatsoever as a result of VirTra's failure to comply with the act and any standards or regulations issued there under.

22. FORCE MAJEURE

Neither party shall be liable for failure of performance, nor incur any liability to the other party on account of any loss or damage resulting from any delay or failure to perform all or any part of this Agreement if such delay or failure is caused by events, occurrences, or causes beyond the reasonable control and without negligence of the parties. Such events, occurrences, or causes will include Acts of God/Nature (including fire, flood, earthquake, storm, hurricane or other natural disaster), war, invasion, act of foreign enemies, hostilities (whether war is declared or not), civil war, riots, rebellion, revolution, insurrection, military or usurped power or confiscation, terrorist activities,

nationalization, government sanction, lockout, blockage, embargo, labor dispute, strike, interruption or failure of electricity or telecommunication service.

Each party, as applicable, shall give the other party notice of its inability to perform and particulars in reasonable detail of the cause of the inability. Each party must use best efforts to remedy the situation and remove, as soon as practicable, the cause of its inability to perform or comply.

The party asserting *Force Majeure* as a cause for non-performance shall have the burden of proving that reasonable steps were taken to minimize delay or damages caused by foreseeable events, that all non-excused obligations were substantially fulfilled, and that the other party was timely notified of the likelihood or actual occurrence which would justify such an assertion, so that other prudent precautions could be contemplated.

The Agency shall reserve the right to terminate this Agreement and/or any applicable order or contract release purchase order upon non-performance by VirTra. The Agency shall reserve the right to extend the agreement and time for performance at its discretion.

23. CONFLICTS OF INTEREST

VirTra shall comply, and require its subcontractors to comply, with all applicable (i) requirements governing avoidance of impermissible client conflicts; and (ii) federal, state and local conflict of interest laws and regulations. In accepting this Agreement, VirTra covenants that it presently has no interest, and will not acquire any interest, direct or indirect, financial or otherwise, which would conflict in any manner or degree with the performance of this Agreement. VirTra further covenants that, in the performance of this Agreement, it will not employ any contractor or person having such an interest. VirTra, including but not limited to VirTra's employees and subcontractors.

24. INDEPENDENT CONTRACTOR

VirTra shall supply all goods and/or perform all services pursuant to this Agreement as an independent contractor and not as an officer, agent, servant, or employee of Agency. VirTra shall be solely responsible for the acts and omissions of its officers, agents, employees, contractors, and subcontractors, if any. Nothing herein shall be considered as creating a partnership or joint venture between the Agency and VirTra. No person performing any services and/or supplying all goods shall be considered an officer, agent, servant, or employee of Agency, nor shall any such person be entitled to any benefits available or granted to employees of the Agency.
VirTra is responsible for payment to sub-contractors and must monitor, evaluate, and account for the sub-contractor(s) services and operations.

25. INSURANCE

At all times during the Term of this Agreement, VirTra shall maintain insurance coverage commensurate with VirTra's obligations and liabilities hereunder.

26. DAMAGE AND REPAIR BY CONTRACTOR

Any and all damages caused by VirTra's negligence or operations shall be repaired, replaced or reimbursed by VirTra at no charge to the Agency. Repairs and replacements shall be completed in a timely and expedient manner. The clean up of all damage related to accidental or intentional release of any/all non-hazardous or hazardous material (e.g. hydraulic fluid, fuel, grease, etc.) from VirTra's vehicles or during performance shall be the responsibility of VirTra. All materials must be cleaned up in a manner and time reasonably acceptable to Agency (completely and immediately to prevent potential as well as actual environmental damage). VirTra must promptly report each incident to the Agency. Damage observed by VirTra, whether or not resulting from VirTra's operations or negligence shall be promptly reported by VirTra to Agency. Agency may, at its option, approve and/or dictate the actions that are in Agency's best interests.

28. LIENS, CLAIMS, AND ENCUMBRANCES AND TITLE

VirTra represents and warrants that all the goods and materials ordered and delivered are free and clear of all liens, claims or encumbrances of any kind. Right of use to the material and supplies accepted shall pass directly from VirTra to Agency at the F.O.B. point, subject to the right of Agency to reject upon inspection.

29. INDEMNITY

Neither party shall not be liable for, and each party shall defend, indemnify and hold harmless the other party and the employees and agents of the other party (collectively, the "Indemnified Parties") against any and all claims, demands, liability, judgments, awards, fines, mechanics' liens or other liens, labor disputes, losses, damages, expenses, charges or costs of any kind or character, including without limitation attorneys' fees and court costs (hereinafter collectively referred to as "Claims"), related to and arising either directly or indirectly from any act, error, omission or negligence of a party or its contractors, licensees, agents, servants or employees, excepting only Claims caused by the sole negligence or willfulness of a party. A party shall reimburse the other for all costs, attorneys' fees, expenses and liabilities incurred with respect to any litigation in which a party is obligated to indemnify, defend and hold harmless the other party as set forth herein.

30. WARRANTY; MAINTENANCE

VirTra shall provide the warranty and maintenance services set forth in Exhibit B to this Agreement. Except as expressly set forth therein, VirTra shall have no other maintenance or support obligations.

31. COOPERATION WITH REVIEW

VirTra shall cooperate with Agency's periodic review of VirTra's performance. VirTra shall make itself available onsite to review the progress of the project and Agreement, as requested by the Agency, upon reasonable advance notice.

32. NON-DISCRIMINATION

VirTra shall comply with all applicable Federal, State, and local laws and regulations concerning nondiscrimination and equal opportunity in contracting. Such laws include, but are not limited to, the following: Title VII of the Civil Rights Act of 1964 as amended; Americans with

Disabilities Act of 1990; and The Rehabilitation Act of 1973 (§§ 503 and 504), VirTra shall not discriminate against any employee, subcontractor or applicant for employment because of age, race, color, national origin, ancestry, religion, sex/gender, sexual orientation, mental disability, physical disability, medical condition, political beliefs, organizational affiliations, or marital status in the recruitment, selection for training including apprenticeship, hiring, employment, utilization, promotion, layoff, rates of pay or other forms of compensation. Nor shall VirTra discriminate in provision of services provided under this Agreement because of age, race, color, national origin, ancestry, religion, sex/gender, sexual orientation, mental disability, physical disability, medical condition, political beliefs, organizational affiliations, or marital status. VirTra's violation of this provision shall be deemed a material default by VirTra giving Agency a right to terminate the Agreement for cause.

33. SEVERABILITY

Should any part of the Agreement between Agency and VirTra or any purchase order be held to be invalid, illegal, or unenforceable in any respect, such invalidity, illegality, or unenforceability shall not affect the validity of the remainder of the Agreement or any purchase order which shall continue in full force and effect, provided that such remainder can, absent the excised portion, be reasonably interpreted to give the effect to the intentions of the parties.

34. NON-WAIVER

No waiver of a breach, failure of any condition, or any right or remedy contained in or granted by the provisions of this Agreement will be effective unless it is in writing and signed by Agency. No waiver of any breach, failure, right, or remedy will be deemed a waiver of any other breach, failure, right, or remedy, whether or not similar, nor will any waiver constitute a continuing waiver unless the writing signed by the Agency so specifies.

35. USE OF COMPANY'S NAME FOR COMMERCIAL PURPOSES

VirTra may not use the name of the Agency or reference any endorsement from the Agency in any fashion for any purpose, without the prior express written consent of the Agency.

36. HEADINGS AND TITLES

The titles and headings in this Agreement are included principally for convenience and do not by themselves affect the construction or interpretation of any provision in this Agreement, nor affect any of the rights or obligations of the parties to this Agreement.

37. ENTIRE AGREEMENT

This Agreement and its Exhibits constitute the final, complete and exclusive statement of the terms of the agreement between the parties. It incorporates and supersedes all the agreements, covenants and understandings between the parties concerning the subject matter hereof, and all such agreements, covenants and understandings have been merged into this Agreement. No prior or contemporaneous agreement or understanding, verbal or otherwise, of the parties or their agents shall be valid or enforceable unless embodied in this Agreement.

38. EXECUTION & COUNTERPARTS

This Agreement may be executed in one or more counterparts, each of which will be considered an original, but all of which together will constitute one and the same instrument. The parties agree that this Agreement, its amendments, and ancillary agreements to be entered into in connection with this Agreement will be considered signed when the signature of a party is delivered a method described herein.

39. NOTICES

All deliveries, notices, requests, demands or other communications provided for or required by this Agreement shall be in writing and shall be deemed to have been given when sent by registered or certified mail, return receipt requested; when sent by overnight carrier; or upon email confirmation to sender of receipt of a facsimile communication which is followed by a mailed hard copy from sender. Each party may designate their desired contact person and address by sending written notice to the other party, to be effective no sooner than ten (10) days after the date of the notice.

40. SURVIVAL

All representations, warranties, and covenants contained in this Agreement, or in any instrument, certificate, exhibit, or other writing intended by the parties to be a part of their Agreement, will survive the termination of this Agreement.

41. CONTRACT EXECUTION

Unless otherwise prohibited by law or Agency policy, the parties agree that an electronic copy of a signed contract, or an electronically signed contract, has the same force and legal effect as a contract executed with an original ink signature. The term "electronic copy of a signed contract" refers to a transmission by facsimile, electronic mail, or other electronic means of a copy of an original signed contract in a portable document format. The term "electronically signed contract" means a contract that is executed by applying an electronic signature using technology approved by the Agency.

42. AGENCY POINT OF CONTACT

Each party will identify a point of contact to facilitate the contractual relationship, be responsible and accountable for fulfilling the requirements under the Agreement. Updated contact information for each point of contact shall be provided to the other party from time to time, as necessary.

43. THIRD PARTY BENEFICIARIES

This agreement does not, and is not intended to, confer any rights or remedies upon any person or entity other than the parties.

44. AUTHORITY
Each party executing the Agreement on behalf of such entity represents that he or she is duly authorized to execute and deliver this Agreement on the entity's behalf, including the entity's Board of Directors or Executive Director. This Agreement shall not be effective or binding unless it is in writing and approved by an authorized representative, as evidenced by their signature as set forth in this Agreement.

45. DATA AND OWNERSHIP
All content generated or stored by the System that is related to the performance and activity of Agency personnel while using the System ("Content") shall be the sole and exclusive property of Agency. Agency acknowledges and agrees that the System provides certain Content backup and verification features and that preservation of the Content is the sole and exclusive responsibility of Agency.

Agency hereby grants VirTra a license to the Content for purposes including, but not limited to, measuring System performance and function, System maintenance, calibration, data aggregation for tests, training results, measurements, etc.

46. CONFIDENTIAL INFORMATION
"Confidential Information" shall include all material non-public information, written or oral, disclosed, directly or indirectly, through any means of communication or observation to a party or any of its affiliates or representatives by the other party. Neither party shall, without the other party's written permission, use or disclose Confidential Information other than in the performance of its obligations under this Agreement. All Confidential Information shall remain the property of the party that developed or legally acquired the Confidential Information. Neither party shall acquire an ownership interest in the other party's Confidential Information by virtue of this Agreement. Each party shall defend, indemnify and hold the other party harmless against any claim, liability, loss, injury or damage arising out of, or in connection with, the unauthorized use, access, and/or disclosure of information by that party and/or its agents, employees or sub-contractors, excepting only loss, injury or damage caused by the sole negligence or willful misconduct of personnel employed by the other party.

47. LIMITATION OF LIABILITY
Both parties' liability for damages to each other for any cause whatsoever, and regardless of the form of action, whether in contract or in tort, shall be limited to the greater of five hundred thousand dollars ($500,000) or two (2) times the Total Agreement Value. For purposes of this Section, "Total Agreement Value" will mean the aggregate Agreement price and any subsequent amendments to this Agreement. In no event will either party be liable to the other party for any direct, special, indirect, incidental, exemplary, punitive or consequential damages, however caused, whether for breach of warranty, breach of contract, negligence, strict liability, tort or under any other legal theory. The foregoing limitation of liability shall not apply to: (i) any indemnity and defense obligations related to infringement of intellectual property, personal injury, death, property damage; (ii) willful misconduct, gross negligence, or fraud; or (iii) reasonable attorney's fees.

48. OWNERSHIP PROPERTY
Except as expressly set forth herein, Agency acknowledges and agrees that all right, title, and interest in and to the System (and the intellectual property rights associated therewith) provided to Agency under the terms and conditions of this Agreement shall, at all times, belong to VirTra or VirTra's partners, suppliers, and licensors. Nothing in this Agreement shall be construed or interpreted to confer any ownership interest in or to the System to Agency. Notwithstanding the foregoing, VirTra may, in VirTra's sole discretion, transfer ownership of the System to Agency provided, however, that no transfer of intellectual property shall be inferred by such a transfer and continued use of the System after transference is permitted only by means of a continuing license from VirTra.

49. TAXES
Sales tax, end user tax, pass-through tax, value-added tax (VAT), transaction privilege tax, consumption tax, customs tax and/or duties are the sole responsibility of the Buyer, and Buyer agrees to reimburse Seller for all applicable taxes that Seller is required to collect, regardless of the tax amount being excluded from VirTra's quotes or Buyer's Purchase Orders.

50. TAX EXEMPTION
Buyer must provide Seller with a correct, valid and signed tax exemption certificate applicable to the specific goods and services purchased, relevant to the end use location, prior to Seller invoicing. If an invalid tax exemption certificate is received or no tax exemption certificate is received, it will be the responsibility of the Buyer to pay all required taxes. Additionally, it will be Buyer's responsibility to obtain any tax refunds permitted if Seller has collected and remitted taxes to a taxing authority.

Exhibit B
Maintenance and Support Agreement

During the term of the Agreement, and provided that Agency is in material compliance with the terms and conditions set forth in Exhibit B, VirTra includes the following maintenance and support at no additional charge. Notwithstanding the foregoing, warranty and support may be excluded for any and all equipment damaged or destroyed by improper use or misuse in which case, additional charges may apply.

1: VirTra System Technician on installation site one time during Plan Year to perform the following functions as needed and if applicable.
*Annual site visits only available on Contracts with the VirTra V-180 or V-300 Simulator Systems in Exhibit D.

- Upgrade VirTra Operating System (VOS) Features [1]

- Install new VirTra training scenarios[2]
- Clean Computer, Monitor & Keyboard
- Perform Computer Diagnostics
- Clean Simulator Screens
- Upgrade to most current base library
- Recalibrate System
- Inspect Refill Station & Regulator
- Recondition & Test Recoil Kits
- Zero all Laser Based Items
- Test Threat-Fire™ Devices for Proper Functionality
- Test OC & Taser Devices for Proper Functionality
- Inspect & Test Speakers and Sound FX
- Provide a List of Inspected Items
- Provide User Refresher Training

2: Parts and Labor in the event of a non-functioning system or accessory.[3]
3: Use of VirTra's Advance Replacement Program.[4]
4: Telephone Support between the hours of 8AM and 5PM AZ Time. After Hours Support calls returned between 8AM and 9AM the following day.
5: Simulator Computer and Projector Upgrade after five (5) years of deployment and if Contract renewal into sixth year of service. Other electronics and hardware to be upgraded at VirTra's discretion.
6: Travel expenses if a VirTra technician must travel to customer location.
7: Overnight Shipping on all replacement or repaired parts[5]
8: Remote Assistance[6]

1 – VirTra Operating Software Version 4 (VOS 4) will be automatically upgraded to the most current 4.XX.XX release during Annual visit. Hardware must be supported by the new release and have enough hard drive space available on the system.
2 – Agency will receive the most current base library at the time of their annual service visit. Not all training scenarios may be compatible with Agency's system and, accordingly, no guarantee of additional scenarios is provided.
3 – TASER X26 blue handle units found to be defective will be replaced with laser sim cartridges and customer will be required to supply working TASER handle.
4 – Limited Quantities and not available for all components.
5 – Where Available.
6 – Agency must allow remote access to System.

Exhibit C
System Acceptance Checklist

Initial Setup and Testing (Some items may not be applicable)
Visually Inspect the System and Explain it's Components
Open each box/container and verify all items are accounted for
Setup and Position Screen(s) and CPU Rack
Layout Speakers, All Wiring and Balance all Sound Levels
Install Training Platform (If Applicable)
Install and Allign all Projected Images and Camera Views
Test all Weapon Kits and Wireless Accessories
Ensure all User Manuals are Correct for System & Accessories
Instructional Training (***Some items may not be applicable)
Explain Proper Maintenance and Enviornmental Conditions
Explain the importance of Firearm Safety
Explain and Demonstrate how to Install Weapon Kits
Explain and Demonstrate how to properly Maintain Weapon Kits
***Explain and Demonstrate how to use the VirTra Refill Station & Tank Filling
Explain and Demonstrate how to Fill the Weapon Magazines
Explain and Demonstrate how to Properly Boot Up and Shutdown the System
Explain the functionality of Wake-On-LAN
Explain and Demonstrate how to Run VOS™
Explain the Different Scenario Types and how to run Each Type of Scenario
Explain and Demonstrate how to Create Scenario Tags and Filters
Explain and Demonstrate how to Create Scenario Playlists
Explain and Demonstrate how to Add Scenario Favorites
Explain and Demonstrate Proper Projector Alignment
Explain and Demonstrate V-Tracking Camera Calibration through V-Tracking Tools
Explain and Demonstrate how to use Diagnostics through V-Tracking Tools
Explain Laser ID's vs Pulse Lengths
Explain and Demonstrate how to Add a New Weapon Kit
Explain and Demonstrate how to Enter a New Trainee
Explain and Demonstrate how to assign Trainee's and Weapons

Explain and Demonstrate how to Zero a Weapon
Explain and Demonstrate Directional Surround Sound
Explain and Demonstrate how to run and Configure VirTra Accessory Controller
Explain and Demonstrate how to use VirTra Wireless Devices
Explain and Demonstrate how to Run a Video Scenario
Explain and Demonstrate Scenario Branching
Explain and Demonstrate Scenario Debrief
Explain and Demonstrate Presentation Mode
***Explain and Demonstrate Low-Light
***Explain and Demonstrate TMaR
***Explain and Demonstrate Breach Door
Explain and Demonstrate how to Create a Marksmanship Trainee Set
Explain and Demonstrate how to Boresight in Marksmanship
Explain and Demonstrate how to Run a Free Fire Course in Marksmanship
Explain and Demonstrate how to Run a Pre-built Course in Marksmanship
Explain and Demonstrate how to Run Marksmanship Debrief
Explain and Demonstrate how to Create and Import a Custom Target
Explain and Demonstrate how to Create and Import a Custom Course of Fire
Explain and Demonstrate how to use VirTra Remote Desktop
Explain how to access VirTra Administration, including as an Administrator
Explain all Icons and their functions of VirTra Administration
Explain the Safety Precautions and Waiver
Explain what consumable items are
Explain the VirTra Warranty and Customer Service & Support Procedures
Show client where manuals are located for System/Accessories
***Explain and Demonstrate how to run V-Author™
***Eplain and Demontrate how to use the VirTra Pano Edit Tool
***Explain and Demonstrate how to Import a V-Author™ Scenario
***Explain and Demonstrate how to Export a New V-Author™ Scenario
***Explain and Demonstrate how to Author a Single Screen Scenario

Exhibit D:
Services, Equipment, and Pricing Summary

Product Code	Product Description	Quantity
V-VICTA-01	VirTra-Virtual Interactive Coursework and Training Academy™ certified simulator training curriculum. V-VICTA™ is a progressive science based approach to the use of simulation as a training system. Program materials include teacher lesson plans, student outline, presentation material, pre-tests, post-tests, course evaluation and all interactive video learning material in conjunction with the simulator for each available course. Virtual Instructor scenarios teach, train, test and sustain methodology to ensure participants dynamically absorb information to facilitate long term transfer of critical psycho-motor skills. Available exclusively to all VirTra simulation systems under a current Service or Subscription plan.	1.00
V-180LE-1	VirTra Systems 180 LE-1 simulator system uses three interconnected screens to produce a more immersive training environment. Multi-directional training allows for scanning, situational awareness, acquiring and engaging moving targets and overcoming distractions. System includes LE content library, computer rack, UPS backup, and audio/projection equipment. System is configurable to fit in a variety of spaces (within minimum requirements). One year warranty and support services included.	1.00
VHU-BS-180	Eliminates the 5 inch black border between screens to increase immersion on VirTra 180 systems.	1.00
VATU-TMAR	Trainee monitor and recording. Real-time monitoring, recording, and playback during debriefing sessions of trainees. Includes software and hardware that integrates into the VirTra line of simulators.	1.00
VATU-LL-G2X	Hardware and software for low light training, includes 2 flashlights. For use with advanced handheld lights only (VATU-FLT-G2X).	1.00
VATU-FLT-TLR1	Model TLR-1 laser-based weapon mounted flashlight. Not compatible with filter flashlight (Requires low light training).	2.00
VATR-M16	Advanced micro-switch activated tetherless rifle recoil kit for AR15, M4 and M16. Incorporates laser, supports tactical reload and instructor jamming capability. Includes one wireless programmable magazine. Requires VirTra's wireless station. (All recoil kits convert real firearms which must be supplied by the customer).	1.00
VATR-M16-MAG	Advanced refillable rifle magazine with pressure supply, shot counting (defaults to 30 rounds per magazine), rechargeable battery pack, and wireless communications. For use with the VATR-M16 recoil kit. (Requires the VWSA-RFS, VWSA-WS, and VWSA-RCS).	1.00

7970 S Kyrene Road, Tempe, AZ 85284 USA | TOLL FREE: 800.455.8746 PH: 480.968.1488 FAX: 480.968.1448 | VIRTRA.COM

VWSA-VATRM16-AP	Adapter plate for the VATR-M16-MAG (Requires VirTra refill station).	1.00
VWSA-RFS	Table-top refill station for all refillable magazines. Includes automatic push button activation and one CO2 tank which must ship empty.	1.00
VTRK-G17-RK	Micro-switch activated tetherless handgun recoil kit for the Glock 17. Includes one Standard Magazine (All recoil kits convert real firearms which must be supplied by the customer).	2.00
VTRK-G17-SM	Additional Standard magazine for use with the VTRK-G17 recoil kits.	1.00
VWSA-VTRKG17-AP	Adapter plate for the VTRK-G17-SM (Requires VirTra refill station).	1.00
VATU-TFII	VirTra Systems patented Threat-Fire™ return-fire-simulator device delivers a safe and adjustable electrical impulse to simulate hostile fire and enhance realism during training. No eye-protection required (Requires wireless station).	1.00
VWSA-WS	Required for wireless recoil kits and the Threat-Fire™ to connect to the VirTra simulator (Only one wireless station needed per system).	1.00
VNLW-TAS-X26/P	TASER® X26 simulation cartridge. Fits both X26 and X26P live TASER® handles. (X26/P handles supplied by customer.)	1.00
VLSI-40MM-LSR	40MM laser based sponge round for use with tube launchers.	1.00

$36,278.70

CONTRACT EXHIBIT C

ACORD®

CERTIFICATE OF LIABILITY INSURANCE

DATE (MM/DD/YYYY): 9/17/2020

THIS CERTIFICATE IS ISSUED AS A MATTER OF INFORMATION ONLY AND CONFERS NO RIGHTS UPON THE CERTIFICATE HOLDER. THIS CERTIFICATE DOES NOT AFFIRMATIVELY OR NEGATIVELY AMEND, EXTEND OR ALTER THE COVERAGE AFFORDED BY THE POLICIES BELOW. THIS CERTIFICATE OF INSURANCE DOES NOT CONSTITUTE A CONTRACT BETWEEN THE ISSUING INSURER(S), AUTHORIZED REPRESENTATIVE OR PRODUCER, AND THE CERTIFICATE HOLDER.

IMPORTANT: If the certificate holder is an ADDITIONAL INSURED, the policy(ies) must have ADDITIONAL INSURED provisions or be endorsed. If SUBROGATION IS WAIVED, subject to the terms and conditions of the policy, certain policies may require an endorsement. A statement on this certificate does not confer rights to the certificate holder in lieu of such endorsement(s).

PRODUCER
Lovitt & Touché A Marsh and McLennan Agency, LLC
1050 W Washington Street, Suite 233
Tempe AZ 85281

CONTACT NAME: Tiffany Zelinko
PHONE (A/C, No, Ext): 602-956-9950 FAX (A/C, No): 602-956-2258
E-MAIL ADDRESS: tzelinko@lovitt-touche.com

INSURER(S) AFFORDING COVERAGE	NAIC #
INSURER A : Federal Insurance Company	20281
INSURER B :	
INSURER C :	
INSURER D :	
INSURER E :	
INSURER F :	

INSURED VIRTSYS-C2
VirTra, Inc.
VirTra Systems, Inc.
7970 S Kyrene Rd
Tempe AZ 85284

COVERAGES **CERTIFICATE NUMBER:** 45313007 **REVISION NUMBER:**

THIS IS TO CERTIFY THAT THE POLICIES OF INSURANCE LISTED BELOW HAVE BEEN ISSUED TO THE INSURED NAMED ABOVE FOR THE POLICY PERIOD INDICATED. NOTWITHSTANDING ANY REQUIREMENT, TERM OR CONDITION OF ANY CONTRACT OR OTHER DOCUMENT WITH RESPECT TO WHICH THIS CERTIFICATE MAY BE ISSUED OR MAY PERTAIN, THE INSURANCE AFFORDED BY THE POLICIES DESCRIBED HEREIN IS SUBJECT TO ALL THE TERMS, EXCLUSIONS AND CONDITIONS OF SUCH POLICIES. LIMITS SHOWN MAY HAVE BEEN REDUCED BY PAID CLAIMS.

INSR LTR	TYPE OF INSURANCE	ADDL INSD	SUBR WVD	POLICY NUMBER	POLICY EFF (MM/DD/YYYY)	POLICY EXP (MM/DD/YYYY)	LIMITS	
A	X COMMERCIAL GENERAL LIABILITY	Y	Y	35916537	3/11/2020	3/11/2021	EACH OCCURRENCE	$ 1,000,000
	CLAIMS-MADE X OCCUR						DAMAGE TO RENTED PREMISES (Ea occurrence)	$ 1,000,000
							MED EXP (Any one person)	$ 10,000
							PERSONAL & ADV INJURY	$ 1,000,000
	GEN'L AGGREGATE LIMIT APPLIES PER:						GENERAL AGGREGATE	$ 2,000,000
	X POLICY PRO-JECT LOC						PRODUCTS - COMP/OP AGG	$ 2,000,000
	OTHER:							$
A	AUTOMOBILE LIABILITY			73577294	3/11/2020	3/11/2021	COMBINED SINGLE LIMIT (Ea accident)	$ 1,000,000
	ANY AUTO						BODILY INJURY (Per person)	$
	OWNED AUTOS ONLY / SCHEDULED AUTOS						BODILY INJURY (Per accident)	$
	X HIRED AUTOS ONLY / X NON-OWNED AUTOS ONLY						PROPERTY DAMAGE (Per accident)	$
								$
A	X UMBRELLA LIAB X OCCUR			79871478	3/11/2020	3/11/2021	EACH OCCURRENCE	$ 15,000,000
	EXCESS LIAB CLAIMS-MADE						AGGREGATE	$ 15,000,000
	DED RETENTION $							$
A	WORKERS COMPENSATION AND EMPLOYERS' LIABILITY Y / N	N / A	Y	71765122	11/18/2019	11/18/2020	X PER STATUTE OTH-ER	
	ANYPROPRIETOR/PARTNER/EXECUTIVE OFFICER/MEMBER EXCLUDED? (Mandatory in NH)						E.L. EACH ACCIDENT	$ 1,000,000
	If yes, describe under DESCRIPTION OF OPERATIONS below						E.L. DISEASE - EA EMPLOYEE	$ 1,000,000
							E.L. DISEASE - POLICY LIMIT	$ 1,000,000
A	Hired Auto Physical Damage			73577294	3/11/2020	3/11/2021	Hired Auto Comp Ded Hired Auto Coll Ded	$100 $500

DESCRIPTION OF OPERATIONS / LOCATIONS / VEHICLES (ACORD 101, Additional Remarks Schedule, may be attached if more space is required)

Certificate Holder is included as additional insured as respects general liability coverage and if required in a written contract, subject to all policy terms, conditions, definitions and exclusions. General Liability coverage is primary and non-contributory if required by written contract. Waiver of Subrogation applies to the general liability if required in a written contract.

Waiver of Subrogation applies to Workers' Compensation if required in a written contract.

Project: VirTra STEP simulated firearm equipment/training - Quote 2816

See Attached...

CERTIFICATE HOLDER

City of St. Charles
2 E. Main St.
St. Charles IL 60174

CANCELLATION

SHOULD ANY OF THE ABOVE DESCRIBED POLICIES BE CANCELLED BEFORE THE EXPIRATION DATE THEREOF, NOTICE WILL BE DELIVERED IN ACCORDANCE WITH THE POLICY PROVISIONS.

AUTHORIZED REPRESENTATIVE

Ginger L Burgess

© 1988-2015 ACORD CORPORATION. All rights reserved.

AGENCY CUSTOMER ID: VIRTSYS-C2

LOC #: _____

ADDITIONAL REMARKS SCHEDULE

AGENCY Lovitt & Touché A Marsh and McLennan Agency, LLC	NAMED INSURED VirTra, Inc. VirTra Systems, Inc. 7970 S Kyrene Rd Tempe AZ 85284
POLICY NUMBER	
CARRIER / NAIC CODE	EFFECTIVE DATE:

ADDITIONAL REMARKS

THIS ADDITIONAL REMARKS FORM IS A SCHEDULE TO ACORD FORM,

FORM NUMBER: 25 **FORM TITLE:** CERTIFICATE OF LIABILITY INSURANCE

The City of St. Charles and any official, trustee, director, officer or employee of the City (plus holder or mortgagee as designated by the City), are Additional Insureds when required by written contract.

© 2008 ACORD CORPORATION. All rights reserved.

The ACORD name and logo are registered marks of ACORD

CHUBB®

Liability Insurance

Endorsement

Policy Period	MARCH 11, 2020 TO MARCH 11, 2021
Effective Date	MARCH 11, 2020
Policy Number	3591-65-37 WCE
Insured	VIRTRA, INC.
Name of Company	FEDERAL INSURANCE COMPANY
Date Issued	DECEMBER 19, 2019

This Endorsement applies to the following forms:

GENERAL LIABILITY

Under Who Is An Insured, the following provision is added.

Who Is An Insured

Additional Insured - Scheduled Person Or Organization

Persons or organizations shown in the Schedule are **insureds**; but they are **insureds** only if you are obligated pursuant to a contract or agreement to provide them with such insurance as is afforded by this policy.

However, the person or organization is an **insured** only:

- if and then only to the extent the person or organization is described in the Schedule;
- to the extent such contract or agreement requires the person or organization to be afforded status as an **insured**;
- for activities that did not occur, in whole or in part, before the execution of the contract or agreement; and
- with respect to damages, loss, cost or expense for injury or damage to which this insurance applies.

No person or organization is an **insured** under this provision:

- that is more specifically identified under any other provision of the Who Is An Insured section (regardless of any limitation applicable thereto).
- with respect to any assumption of liability (of another person or organization) by them in a contract or agreement. This limitation does not apply to the liability for damages, loss, cost or expense for injury or damage, to which this insurance applies, that the person or organization would have in the absence of such contract or agreement.

Under Conditions, the following provision is added to the condition titled Other Insurance.

Conditions

Other Insurance – Primary, Noncontributory Insurance – Scheduled Person Or Organization

If you are obligated, pursuant to a contract or agreement, to provide the person or organization shown in the Schedule with primary insurance such as is afforded by this policy, then in such case this insurance is primary and we will not seek contribution from insurance available to such person or organization.

Schedule

Persons or organizations that you are obligated, pursuant to a contract or agreement, to provide with such insurance as is afforded by this policy.

All other terms and conditions remain unchanged.

Authorized Representative

CHUBB®

Liability Insurance

Endorsement

Policy Period	MARCH 11, 2020 TO MARCH 11, 2021
Effective Date	MARCH 11, 2020
Policy Number	3591-65-37 WCE
Insured	VIRTRA, INC.
Name of Company	FEDERAL INSURANCE COMPANY
Date Issued	DECEMBER 19, 2019

This Endorsement applies to the following forms:

GENERAL LIABILITY

Conditions

Under Conditions, Transfer Or Waiver Of Rights Of Recovery Against Others, the following provision is added:

Transfer Or Waiver Of Rights Of Recovery Against Others

However, we waive any right of recovery we may have against the designated person or organization shown below because of payments we make for injury or damage arising out of your ongoing operations or done under a contract with that person or organization and included in the **products-completed operations hazard**. This waiver applies to the designated person or organization.

Designated Person Or Organization

PERSONS OR ORGANIZATIONS THAT YOU ARE OBLIGATED, PURSUANT TO A CONTRACT OR AGREEMENT, TO PROVIDE WITH SUCH INSURANCE AS IS AFFORDED BY THIS POLICY

WC 124
(4-84)

WC 00 03 13

WAIVER OF OUR RIGHT TO RECOVER FROM OTHERS ENDORSEMENT

This endorsement changes the policy to which it is attached effective on the inception date of the policy unless a different date is indicated below.

(The following "attaching clause" need be completed only when this endorsement is issued subsequent to preparation of the policy.)

This endorsement, effective on 11/18/18 (DATE) at 12:01 A. M. standard time, forms a part of

Policy No. (19)7176-51-22 of the FEDERAL INSURANCE COMPANY (NAME OF INSURANCE COMPANY)

issued to VIRTRA, INC.

Endorsement No.

Authorized Representative

We have the right to recover our payments from anyone liable for an injury covered by this policy. We will not enforce our right against the person or organization named in the Schedule. This agreement applies only to the extent that you perform work under a written contract that requires you to obtain this agreement from us.*

This agreement shall not operate directly or indirectly to benefit any one not named in the Schedule.

Schedule

AS REQUIRED PER WRITTEN CONTRACT

Copyright 1983 National Council on Compensation Insurance.

TEXAS WAIVER OF OUR RIGHT TO RECOVER FROM OTHERS ENDORSEMENT

This endorsement applies only to the insurance provided by the policy because Texas is shown in Item 3.A. of the Information Page.

We have the right to recover our payments from anyone liable for an injury covered by this policy. We will not enforce our right against the person or organization named in the Schedule, but this waiver applies only with respect to bodily injury arising out of the operations described in the Schedule where you are required by a written contract to obtain this waiver from us.

This endorsement shall not operate directly or indirectly to benefit anyone not named in the Schedule.

The premium for this endorsement is shown in the Schedule.

Schedule

1. (☐) Specific Waiver
   Name of person or organization
   ANY PERSON OR ORGANIZATION FOR WHOM THE NAMED INSURED HAS AGREED BY WRITTEN CONTRA CT TO FURNISH THIS WAIVER.

   (☒) Blanket Waiver
   Any person or organization for whom the Named Insured has agreed by written contract to furnish this waiver.
2. Operations:

3. Premium:
   The premium charge for this endorsement shall be ___2%___ percent of the premium developed on payroll in connection with work performed for the above person(s) or organization(s) arising out of the operations described.

4. Advance Premium:

This endorsement changes the policy to which it is attached and is effective on the date issued unless otherwise stated.
(The information below is required only when this endorsement is issued subsequent to preparation of the policy.)

Endorsement Effective **11-18-19** Policy No. **(20) 7176-51-22** Endorsement No.

Insured **VIRTRA, INC.** Premium $ **Incl.**

Insurance Company **Federal Insurance Company**

Countersigned By _____

© Copyright 2014 National Council on Compensation Insurance, Inc. All Rights Reserved.

Insured Copy

City of St Charles CHANGE ORDER: Simulated Firearm Equipment and Training
Contract # PO#

This document is incorporated into the above contract as an amendment to the Contract between the City and the Contractor/Professional Service Provider commencing on the date the last party signs this document. Any change to the character, form, quality, extent, or cost of the Service/Project shall be in writing and approved on this form.

1. This Change Order is required due to (check all that apply):

- ☐ Changed / Unforeseen Condition
- ☐ Errors and Omissions
- ☐ Change in Scope
- ☐ Renewal / Extension of Services
- ☐ _____

2. The effect of this change is (check all that apply):

- ☐ Total Cost is increased by $_____
- ☐ Extension of _____ (calendar / work) days
- ☐ Material is increased by $_____
- ☐ Extension of Completion Date from _____to_____
- ☐ Emergency Change, not to exceed $_____
- ☐ _____

3. Attachments Supporting Change Order (check all that apply)

- ☐ Contractor's Proposal
- ☐ other: _____
- ☐ Description of Change (include Drawing if applicable)

Change in Price			Change in Completion (days / calendar date)	
Original Price *(reference Agreement cover page)*	$_____	*a*	Original: #days until completion / calendar date for completion *(reference date of Work May Proceed)*	_____
Current Price resulting from Prior Change Orders *(reference prior Change Order line d)*	$_____	*b*	Current Completion resulting from Prior Change Orders: *(reference prior Change Order line d)*	_____
Net Increase/decrease of this Change Order *(reference above #2)*	$_____	*c*	Net increase/decrease of days for this Change Order *(reference above #2)*	_____
New Price inclusive of this Change Order* *d=(b+c)*	$_____	*d*	New Time of Completion inclusive of this Change Order *d=(b+c)*	_____
Cumulative Price change since execution* *e=(d-a)*	$_____	*e*	Cumulative Time of completion since execution (expressed as total days)** *e=(d-a)*	_____
**if the new total price (d) exceeds the threshold level from which it was originally approved, the City Manager is required to sign his approval.*			***if the cumulative change in days of completion exceeds the contracted dates for completion, are Liquidated Damages applicable?* ***Yes or No***	

All parties hereby acknowledge and agree this Change Order is inclusive of all known changes to scope, compensation and work schedule on behalf of the undersigned and Contractor's supplier, subcontractor, consultant, and agent necessary to complete the Project/Service. All parties hereby acknowledge that this Change Order is incorporated into the previously executed Contract by the signature of the parties below.

For Office Use Only

City Project Manager _____ date_____

Contractor/Professional Service Provider _____date_____

ADDITIONAL DOCUMENTATION

VENDOR CODE OF ETHICS

The City of St. Charles is committed to a procurement process which fosters Fair and Open Competition, is conducted under the Highest Ethical Standards and enjoys the complete Confidence of the Public.

Each vendor who seeks to do business with the city is required to commit to the city's Vendor Code of Ethics.

1. **The Cone of Silence:** A Cone of Silence exists between bidders and city representatives to protect the integrity of the procurement process by shielding both parties from undue influences.
   a. During the period beginning with the issuance of the solicitation document through the execution of the award document, bidders are prohibited from all communications regarding the solicitation with city representatives.
      i. All questions and inquiries should be directed to Procurement@stcharlesil.gov.
   b. Any attempt by a bidder to influence a city representative, or to secure any unwarranted privileges or advantages, may be grounds to disqualify the bidder from participation in the solicitation and future solicitations.
2. **Contractor Responsibilities**
   a. Contractors will complete the contract at the contracted price pursuant to the terms set forth in the contract.
   b. Contractors will meet the quality standards as defined and clarified by city representatives.
   c. Contractor will submit timely, accurate invoices, with required backup documentation, for goods and/or services performed under the contract.
3. **Gift Giving and Hospitality**
   a. Bidders, contractors, or potential bidders or contractors, will not offer or give any gift, item or service of value, donations of items or services, meals or other hospitality, directly or indirectly, to a city representative, representative's family member, or other contractor doing business with the city that is in violation of the law.

CONFLICT OF INTEREST

Please respond which of the below statements is accurate.

☒ There is not a conflict of interest, however in the event that a conflict of interest is identified anytime during the duration of business dealings, or reasonable time thereafter, you, your firm or your firm's ownership, management or staff will immediately notify the City of St. Charles in writing.	☐ There is an affiliation or business relationship between you, your management or staff, your firm or your firm's ownership, and an employee, officer or elected official of the City of St. Charles who makes recommendations to the City of St. Charles with respect to expenditures of money, employment, and elected or appointed positions. Provide on a separate letter included with your response any and all affiliations or business relationships that might cause a conflict of interest or any potential conflict of interest. Include the name of each City of St Charles affiliate with whom you, your firm or your firm's ownership, management or staff has an affiliation or a business relationship.

Company Name: VirTra Inc.

Business Contact: Ryan Bray **e-mail address** rbray@virtra.com

Sales Contact: Steve Dilullo **e-mail address** steve.diiullo@virtra.com

Customer Service e-mail address service@virtra.com **Date:** 17 September 2020

Return this form to City of St. Charles Purchasing Division– Procurement@stcharlesil.gov

CERTIFICATION OF COMPLIANCE

1. The undersigned certifies that, pursuant to the **Equal Opportunity Employer** provisions of Section 2000(e) of Chapter 21, Title 42 of the United States Code and Federal Executive Order No. 11246 as amended by Executive Order No. 11375, the bidder is compliant with all Equal Employment Opportunity Commission ("EEOC") requirements.
2. The undersigned certifies that, pursuant to the **Illinois Human Rights Act** provisions of Section 775 ILCS 5/2-105, the bidder complies with and certifies that it is compliant with all equal employment practice requirements contained therein, and that it has adopted a written sexual harassment policy that meets the minimum requirements.
3. The undersigned certifies that, pursuant to the Public Act 101-0221, Section 2-109, and the City of St. Charles Anti-Harassment Policy (adopted by ordinance on December 16, 2019), the bidder complies with and certifies that **Sexual Harassment Prevention Training** is provided at least once a year to all employees who work with City employees and/or on City property. The city may, at any time, request proof of the vendor's compliance, and the vendor will comply with evidence within two business days.
4. The undersigned certifies that, pursuant to the State of Illinois Law provisions of Section 720 ILCS 5/33E prohibiting **Bid-rigging or Bid-rotating**, the bidder is not barred from bidding on this project, or entering into a contract for this project.
5. The undersigned certifies that, pursuant to the **Federal Acquisition Regulation** (FAR 48 C.F.R. §52.203-2) the bidder agrees that:
   a. Prices in the offer have been arrived at independently without consultation, communication, or agreement with any other competitor;
   b. Prices in the offer have not been and will not be knowingly disclosed by the offeror, directly or indirectly, to any other competitor before bid opening or contract award unless otherwise required by law; and
   c. No attempt has been made or will be made by the bidder for the purpose of restricting competition.
6. The undersigned certifies that, pursuant to the **Illinois Department of Revenue Tax Laws** provisions of Section 65 ILCS 5/11-42.1-1, the bidder is not barred from doing business with any unit of local government in the State of Illinois as a result of a delinquency in payment of any taxes unless the bidder is contesting, in accordance with the procedures established by the appropriate statute, its liability for the tax or the amount of the tax.
7. The undersigned certifies that, pursuant to the **Illinois Drug Free Workplace Act** provisions of Section 30 ILCS 580/3, the bidder deposes states and certifies that it will provide a drug free workplace, inclusive of all satellite locations as well as the City of St. Charles sites.
8. The undersigned certifies that, pursuant to the **Illinois Prevailing Wage Act** provisions of Section 820 ILCS 130/0.01 et seq, the bidder, when required, is compliant with all requirements of, including provisions as to wages, medical and hospitalization insurance and retirement benefits for those trades covered in the Act. Pursuant to Illinois Public Act provisions of Section 94-0515 and all provisions of the Employee Classification Act, provisions of Section 820 ILCS 185/1 et seq., said bidder agrees to submit certified payroll records as required.
9. The undersigned certifies that, pursuant to the **Employment of Illinois Workers** on Public Works Act provisions of Section 30 ILCS 570/0.01, et seq., the bidder is compliant with all requirements. Furthermore, the bidder certifies that it will demonstrate a good faith effort toward providing equal employment opportunities for City of St. Charles residents to work as crafts persons, consistent with the racial, ethnic, and gender demographics of the City's labor force.
10. The undersigned certifies that, pursuant to the **National Security/USA Patriot Act** as defined in Presidential Executive Order 13224, the bidder and all affiliated parties, are not working for or with, nor acting on behalf of, a Specially Designated National and Blocked Person.
11. The undersigned certifies that they have not colluded with or participated in any **unethical practices** with any person, firm or employee of the City of St Charles which would in any way be construed as an unethical business practice.

Return this form to City of St. Charles Purchasing Division– Procurement@stcharlesil.gov

De-Escalation: Training Scenarios

Law enforcement is a difficult job. Officers go to work knowing their time will be filled with mitigating harm, preventing crime and interacting with people with the best—and worst—intentions.

To prepare officers for these situations, VirTra simulators allow officers to practice and improve their de-escalation skills while increasing cognitive load. Each simulator is equipped with a wide variety of branching scenarios that allow for consistent communication, full toolbelt training, evaluation and AAR's for de-escalation methods, with accompanied curriculum.

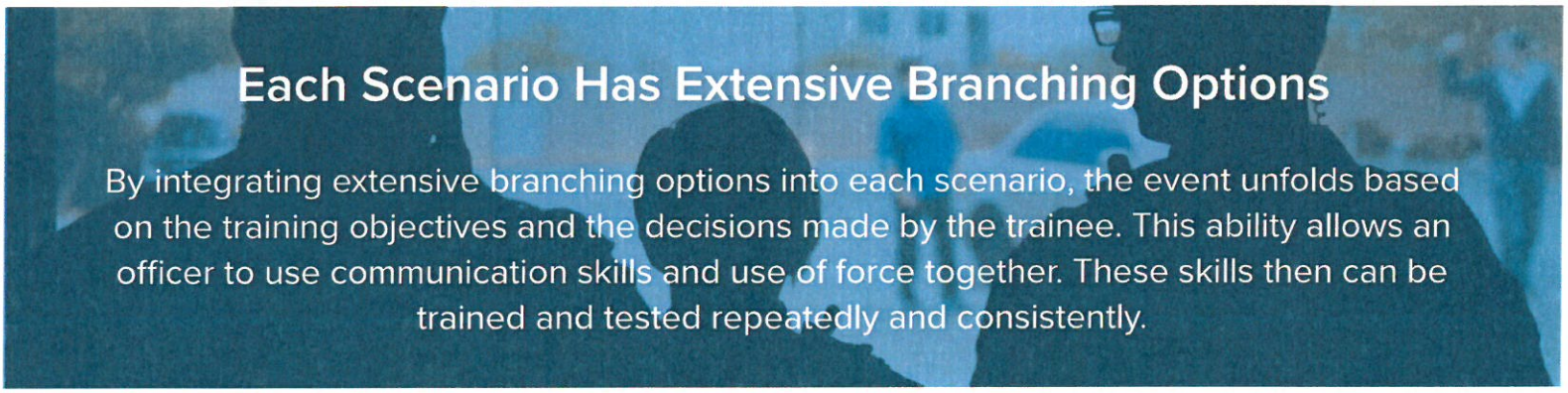

Each Scenario Has Extensive Branching Options

By integrating extensive branching options into each scenario, the event unfolds based on the training objectives and the decisions made by the trainee. This ability allows an officer to use communication skills and use of force together. These skills then can be trained and tested repeatedly and consistently.

For example, one of VirTra's scenarios—"Bridge Baby"—is a student officer on patrol, when they are flagged down by a hysterical mother who says her husband took their baby and is threatening to hurt the child.

This scenario forces the training officer to confront the father and try to de-escalate the scenario. Depending on how the officer interacts with the subject on-screen, instructors can choose to have the subject provide more information, show extreme agitation or calmly cooperate.

Alternate endings are the power behind having de-escalation scenarios with dozens of realistic branching options. Trainees learn how to interpret a situation, keep their head on a swivel, talk with subjects and de-escalate a situation in a safe, controlled environment.

More De-Escalation scenario examples on back

De-Escalation Scenarios Include:

Juveniles Disturbing

This scenario is a teaching element for incidents best resolved through de-escalation, with a wide variety of possible outcomes.

Mental Illness

This scenario tests the officer's proficiency in verbal and decision making skills, use of force progression and safety tactics.

Suspicious Circumstance

Officers must utilize and demonstrate verbal, observation and investigative skills as the scenario progresses to a violent encounter.

Pedestrian Contact

Officers are placed in a de-escalation scenario as subjects become verbally resistive.

Traffic Stop

This scenario places the student in a judgmental use of force encounter, testing their verbal de-escalation, observation and decision-making skills.

Autism Awareness

This scenario teaches officers how to recognize and best interact with individuals with Autism.

These are a small sample of VirTra's De-Escalation scenarios. For more information, please visit VirTra.com or contact a sales representative.

VirTra

7970 S. Kyrene Rd. Tempe, AZ 85284 USA
800.455.8746 | 480.968.1488 | sales@virtra.com | VirTra.com

V-VICTA: Virtual Interactive Coursework Training Academy

One of the most important aspects of law enforcement training is the quality of the content. V-VICTA's curriculum and scenarios are designed to teach, train, test and sustain officers in crucial, potentially life-saving skills while increasing their cognitive load.

This all-in-one solution provides the Instructor the necessary tools to instill proper training and knowledge transfer—both inside and out of the simulator.

Each V-VICTA Curriculum Includes:

- Pre- and post-tests
- Instructor presentations
- Recent after-action reports
- Scoring Rubric
- Relevant case law
- Corresponding scenarios
- Certification by 36+ States POST
- And more.

All V-VICTA materials are IADLEST certified. The IADLEST National Certification Program™ for POST Certification sets the national curriculum training standards across 36 states, ensuring officers receive the highest quality training.

IADLEST Certified

Newly Released Curriculum Includes:

- Active Threat/Active Killer
- Autism Awareness
- Contact and Cover Concepts
- High-Risk Vehicle Stop
- Human Factors in Force Encounters
- Injured Officer Handgun Manipulation
- Mental Illness Training: A Practical Approach
- TASER Targeting
- Tourniquet Application Under Threat
- Weapon Transitions

All curriculum is developed exclusively with nationally-recognized partnerships, including:

HALEY STRATEGIC

SARRC Southwest Autism Research & Resource Center

VISTELAR

Force Science® Institute Ltd.

V-VICTA™

Autism Awareness

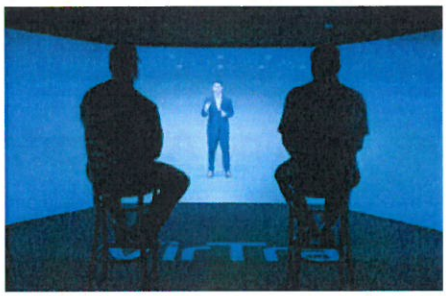

This curriculum teaches officers how to distinguish Autistic behavior from other behaviors, such as alcohol use or deception.

Contact and Cover

Contact and Cover is designed to teach officers how to correctly identify threats to the team, respond appropriately to any threat, etc.

Human Factors

To provide the best training, one must understand how the brain collects, processes and uses information.

Tourniquet Application

This course teaches trainees how to apply tourniquets during events, with both partner drills and solo.

High Risk Vehicle Stop

Officers go through various training points and assailants as they follow one of hundreds of paths towards resolution.

TASER Targeting

Trainees learn the best way to utilize a TASER in the field.

VirTra

7970 S. Kyrene Rd. Tempe, AZ 85284 USA
800.455.8746 | 480.968.1488 | sales@virtra.com | VirTra.com

VirTra V-180™

virtra.com/v-180/

The V-180™ is the higher standard for decision-making simulation and tactical firearms training. Three screens and a 180-degree immersive training environment ensures that time in the simulator translates into real world survival skills. The system reconfigures to support 9 lanes of individual firing lanes.

V-180™ SYSTEM FEATURES AND CAPABILITIES

Fully immersive 180-degree environment
Real-life scenarios and marksmanship training capability
Seamless high resolution video
Debrief and record a trainee's performance, judgment, and reaction time
Multi-directional surround sound for unsurpassed audio realism
Arsenal of recoil kits available for most firearms
One year "Best in the Industry" warranty with 24/7 service and technical support

"I would highly recommend this system to other chiefs in other areas and make it part of their training course."

Ellis C Jackson Chief of Police, Thomasville Georgia

VirTra

V-180™ IN ACTION!

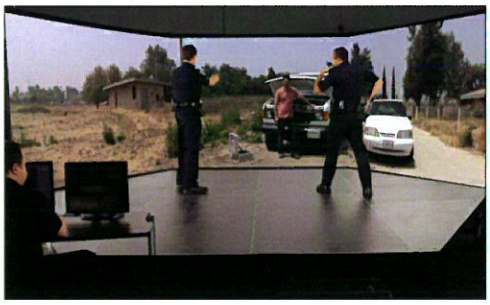

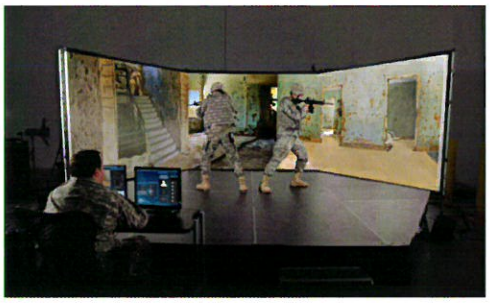

FOOTPRINT & CONFIGURATION

FRONT PROJECTION

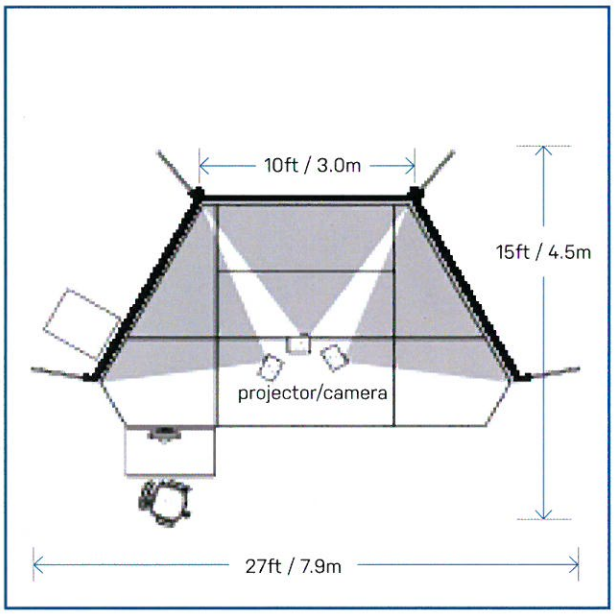

REAR PROJECTION

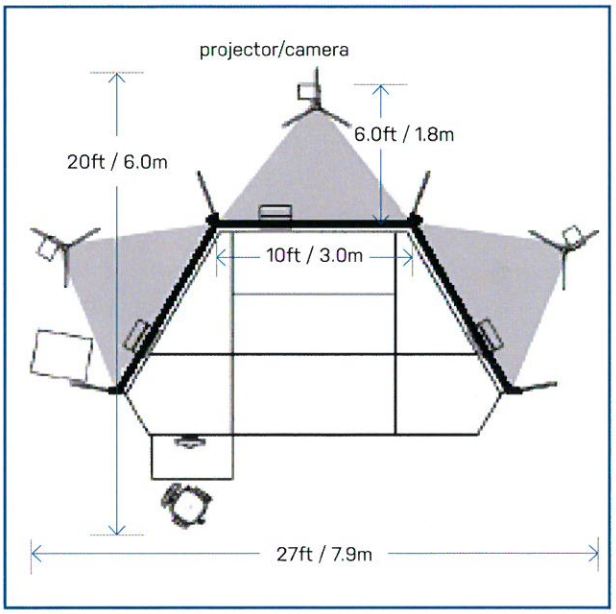

SYSTEM SPECS

- 4 computers
- Rack mount chassis
- Intel® processors
- Hi-end graphics cards
- 8GB RAM
- 3 - XGA DLP projectors
- 3 - 10' x 7.5' projection screens
- 3 - Self powered monitor speakers with +10db input
- 3 - Gigabit laser tracking cameras
- Dual monitor with backlit keyboard and optical mouse

Scan the QR code with your smart phone device or visit virtra.com/v-180 to learn more.

VirTra

7970 S. Kyrene Rd. Tempe, AZ 85284 USA
800.455.8746 | 480.968.1488 | sales@virtra.com | VIRTRA.COM

FOLLOW US ON SOCIAL MEDIA

facebook.com/virtrasystems @virtrasystems youtube.com/virtrasystems

0415

© 2015. VirTra. All Rights Reserved. Trademarks and trade names are property of their respective owners.